CC Interception for IMS-based VoIP Calls

Nagaraja (Nag) Rao
nagaraja.rao@nsn.com, Tel: +1 561 306 5062

 © Nokia Siemens Networks

Problem Overview

© Nokia Siemens Networks

Problem Summary

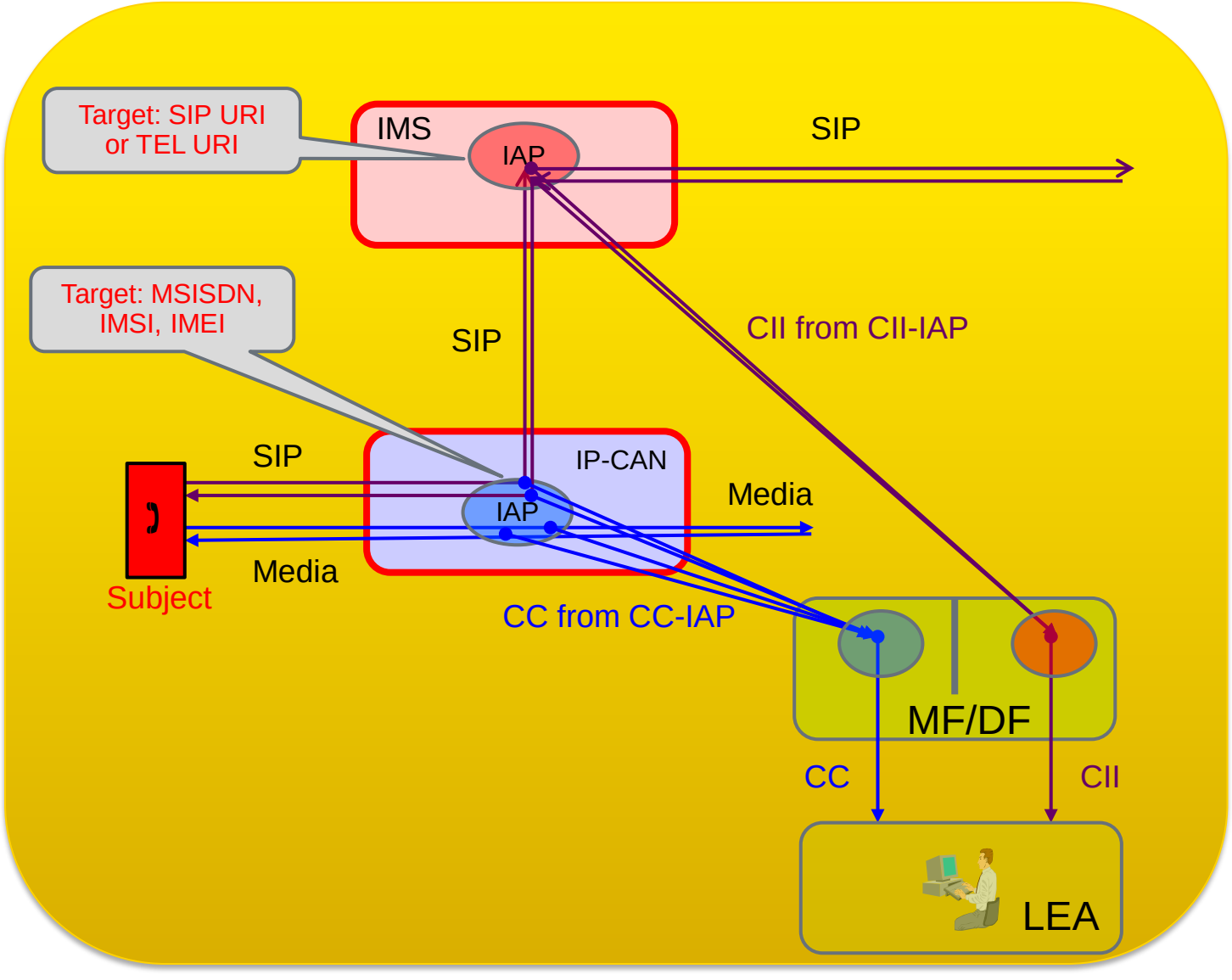

- ATIS Standards focus on “e” interface & indicate that the CC interception can be done at IP-CAN and may be at MGW (for PSTN forwarding scenarios);
- 3GPP Standards assume Packet Data Interception for CC;
- Issues:
  - Two separate Subject Identifiers
  - IAPs statically provisioned;
  - All packets are intercepted as CC - including signaling and other packet data traffic, no correlation to the actual voice call;
  - Correlation of CC with CII
  - CC interception for forwarded calls;
  - Generation of CC-related events;
  - Extraction of DTMF digits from Subject voice-stream.

© Nokia Siemens Networks

Problem Case 1: A-party is the Subject; Originating Call

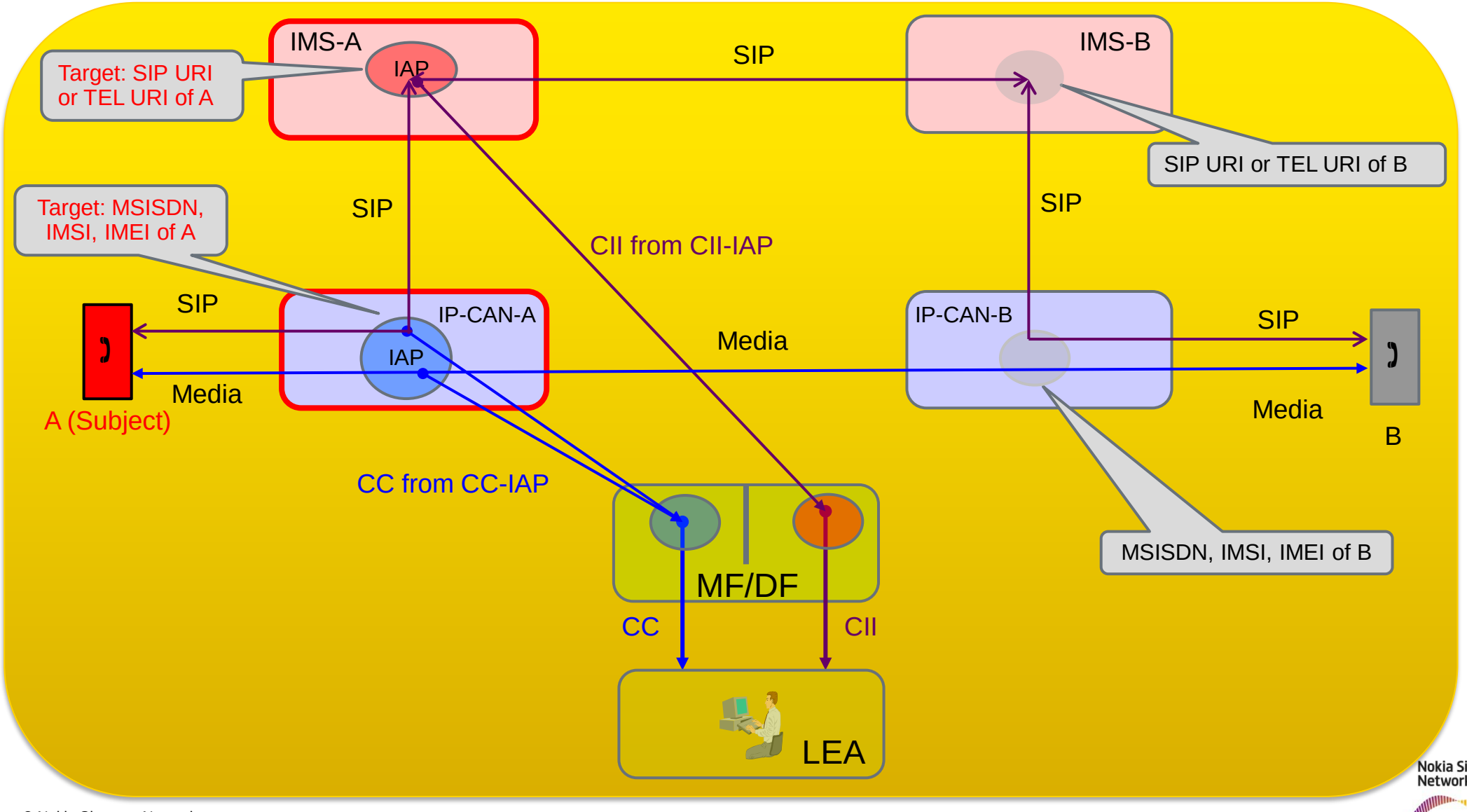

© Nokia Siemens Networks

Problem Case 2: B-party is the Subject; Terminating Call

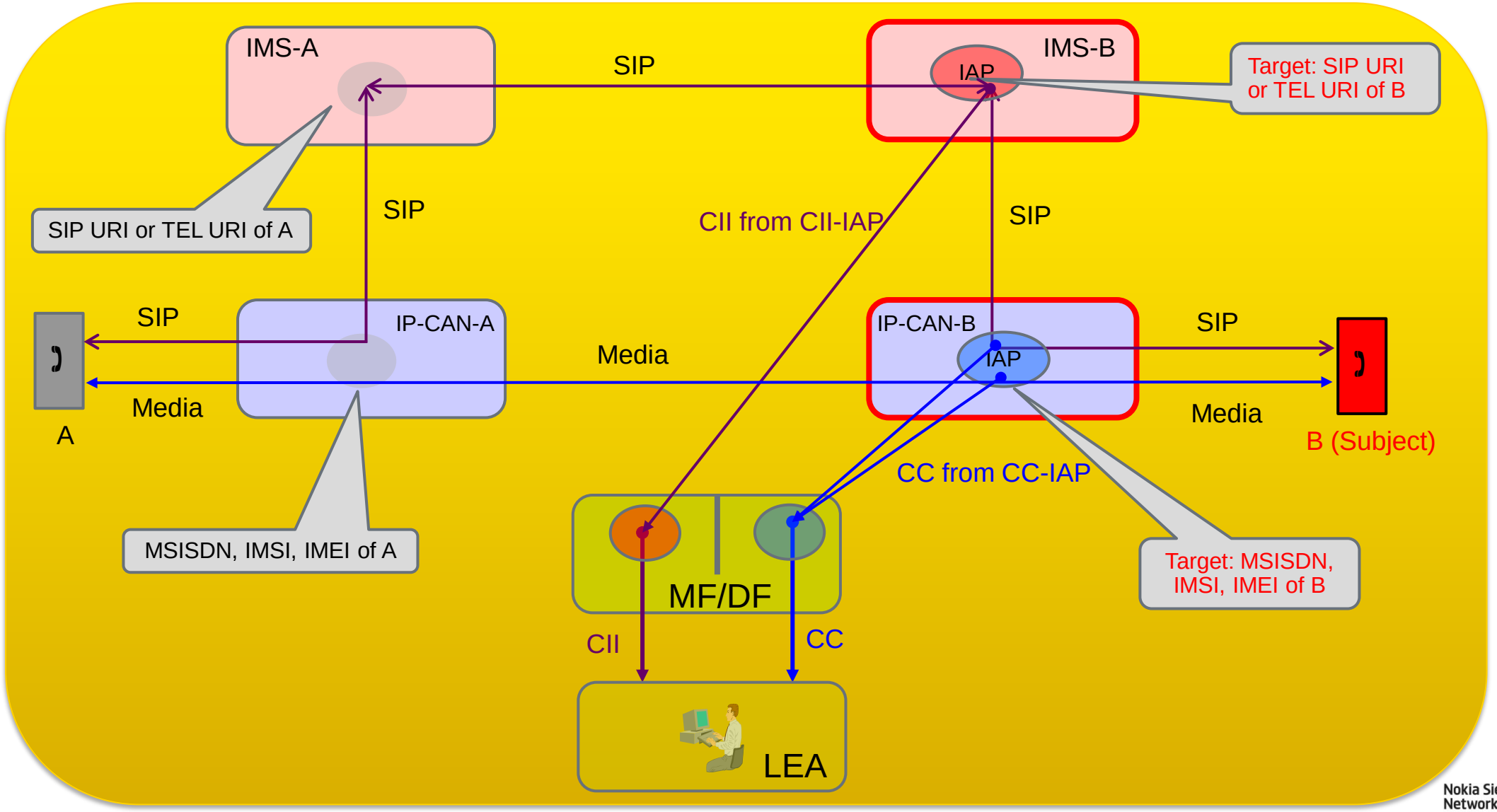

© Nokia Siemens Networks

Problem Case 3: B-party is the Subject; Call Forwarding

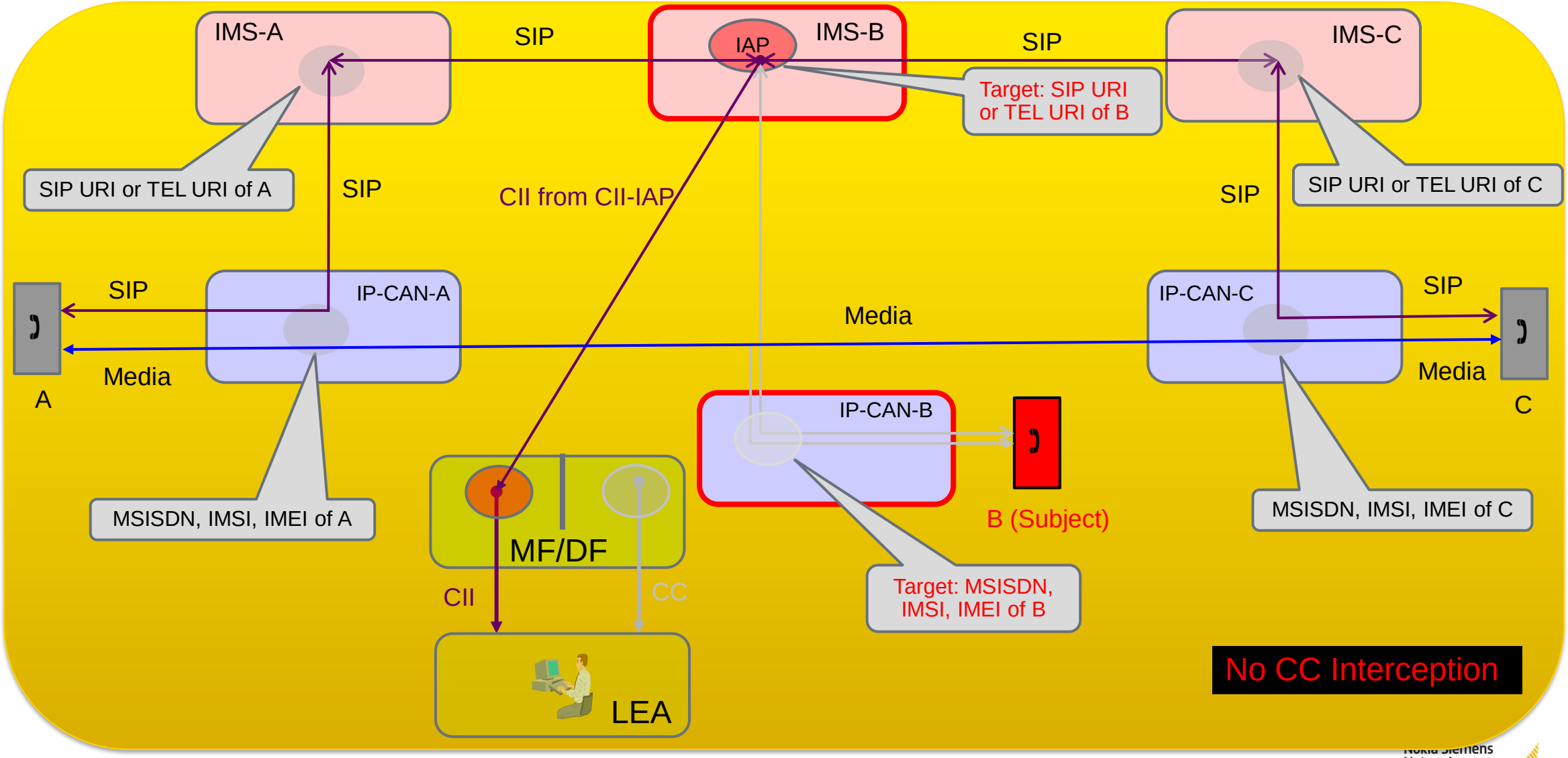

© Nokia Siemens Networks

A Sample Call Flow

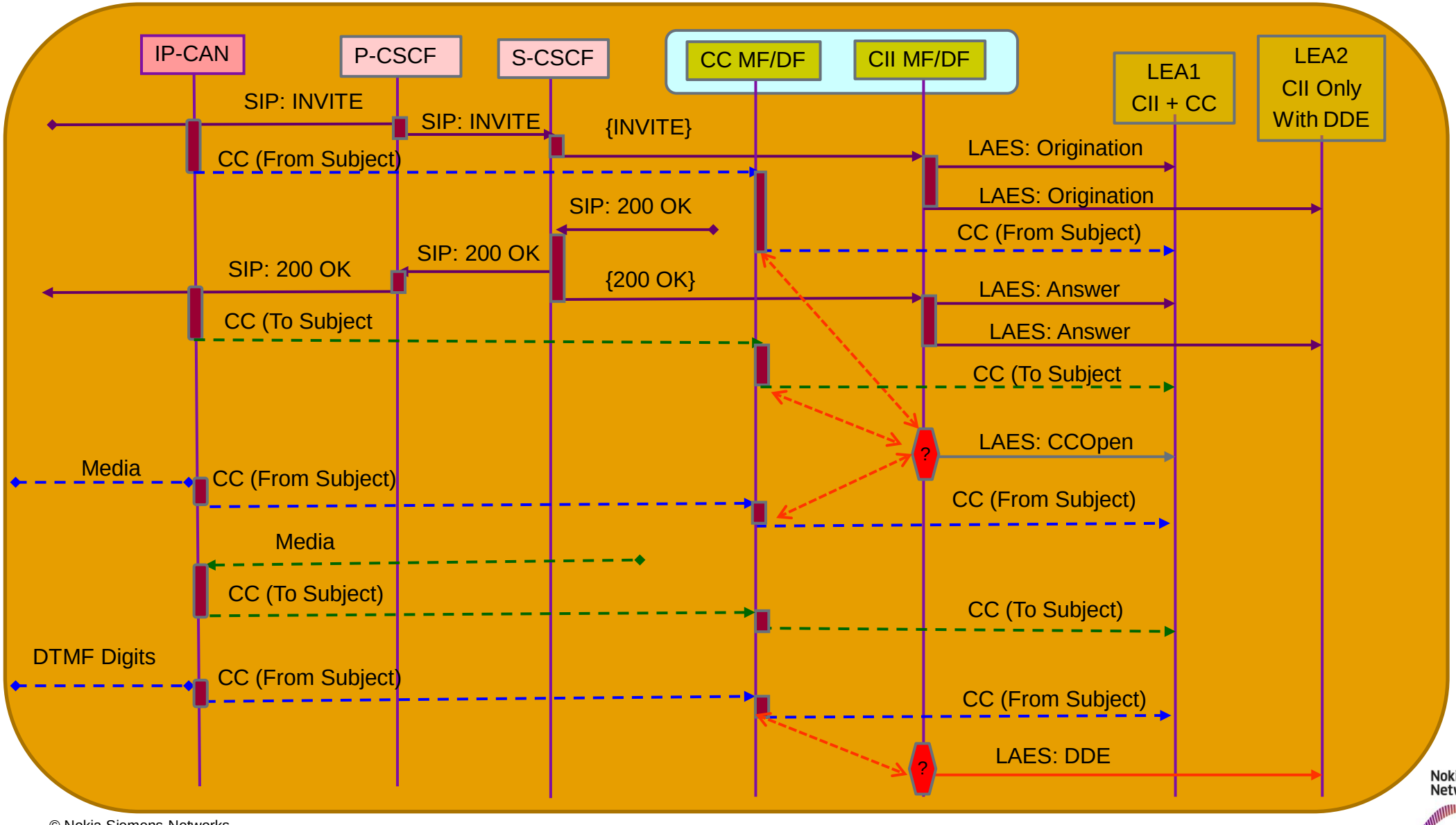

© Nokia Siemens Networks

ATIS-0700005 Annex D Scenarios

© Nokia Siemens Networks

Call Origination – No IMS Roaming – IMS to IMS Call

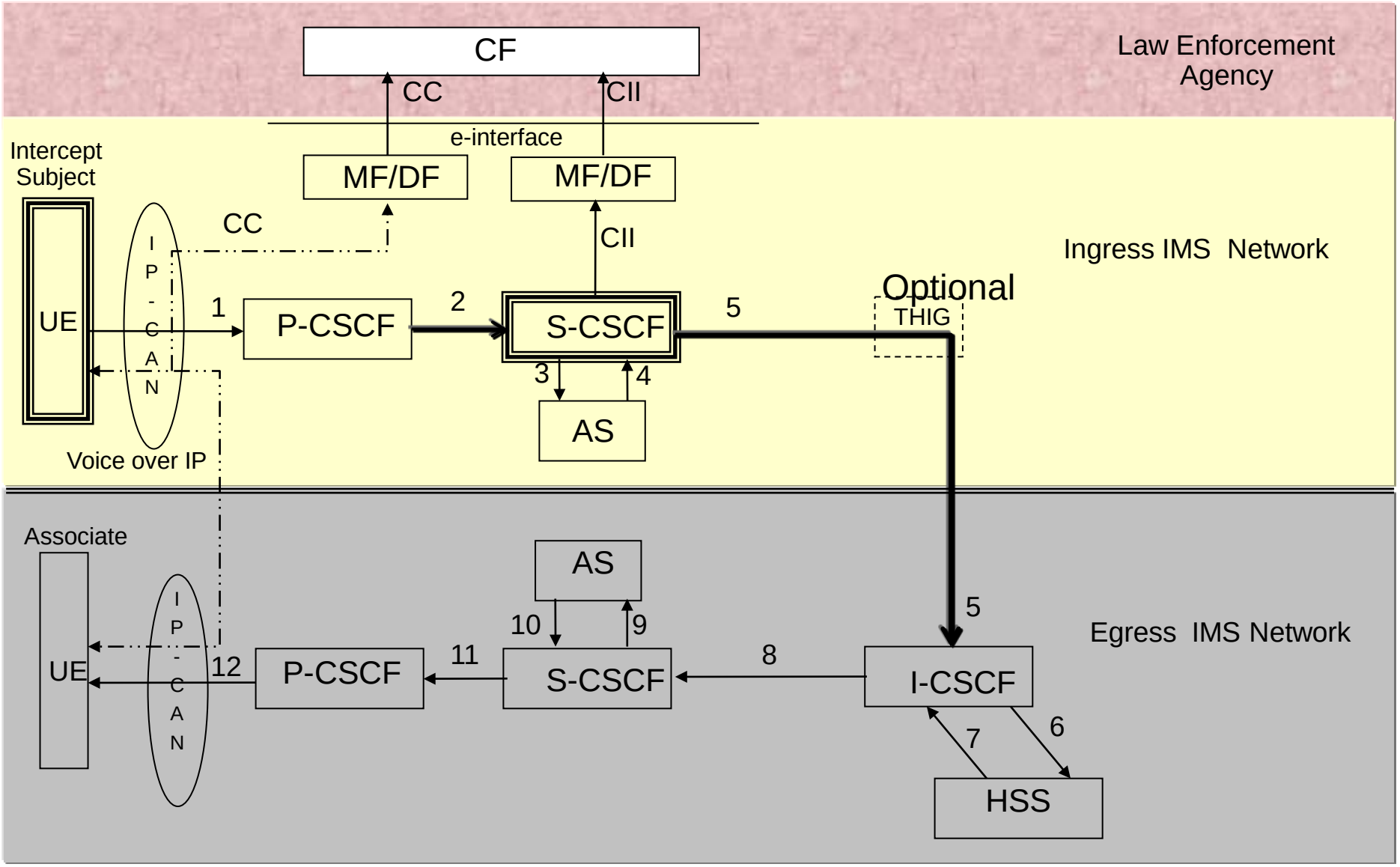

© Nokia Siemens Networks

Call Origination – No IMS Roaming – IMS to PSTN Call

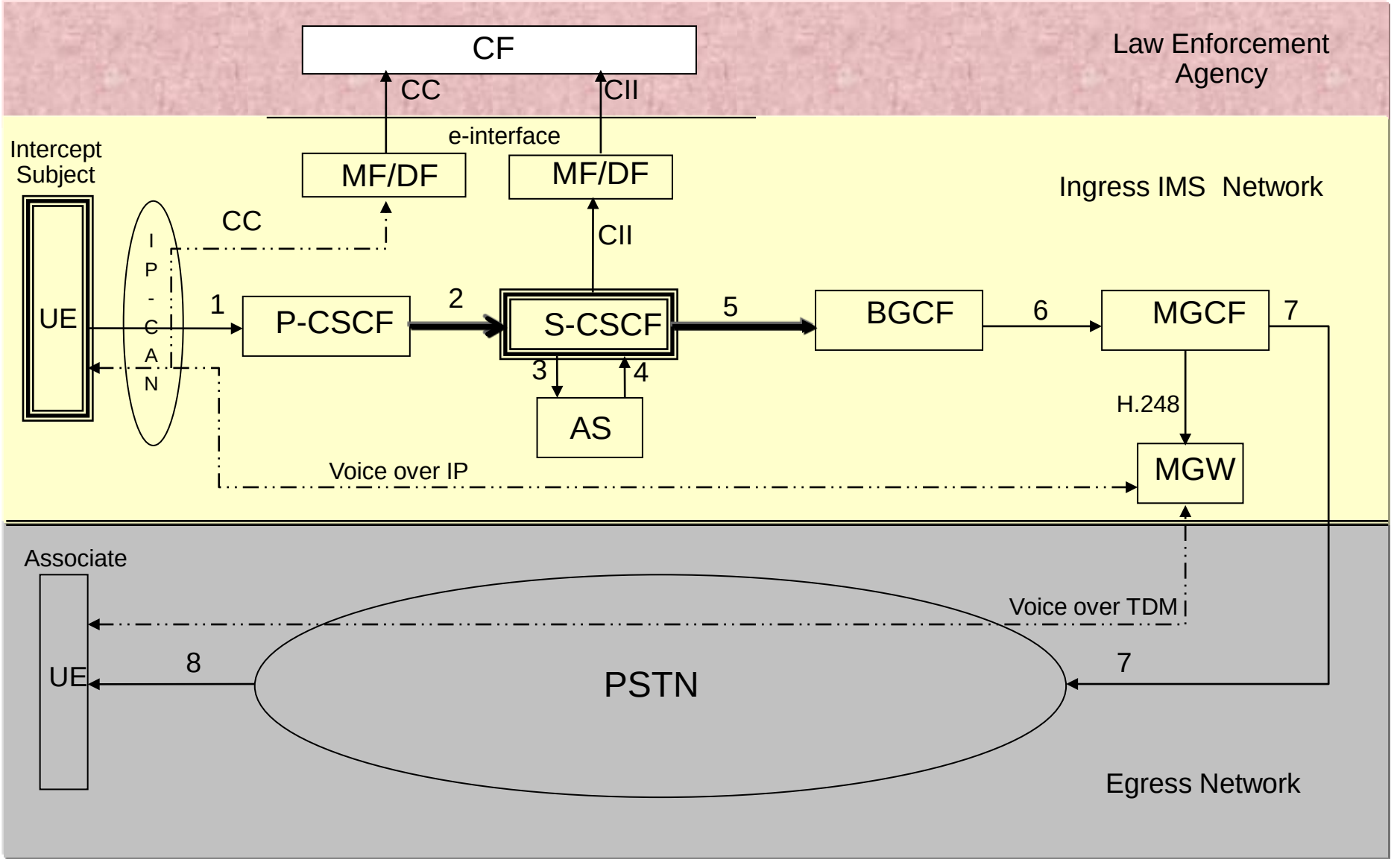

© Nokia Siemens Networks

Call Origination – IMS Roaming – IMS to IMS Call

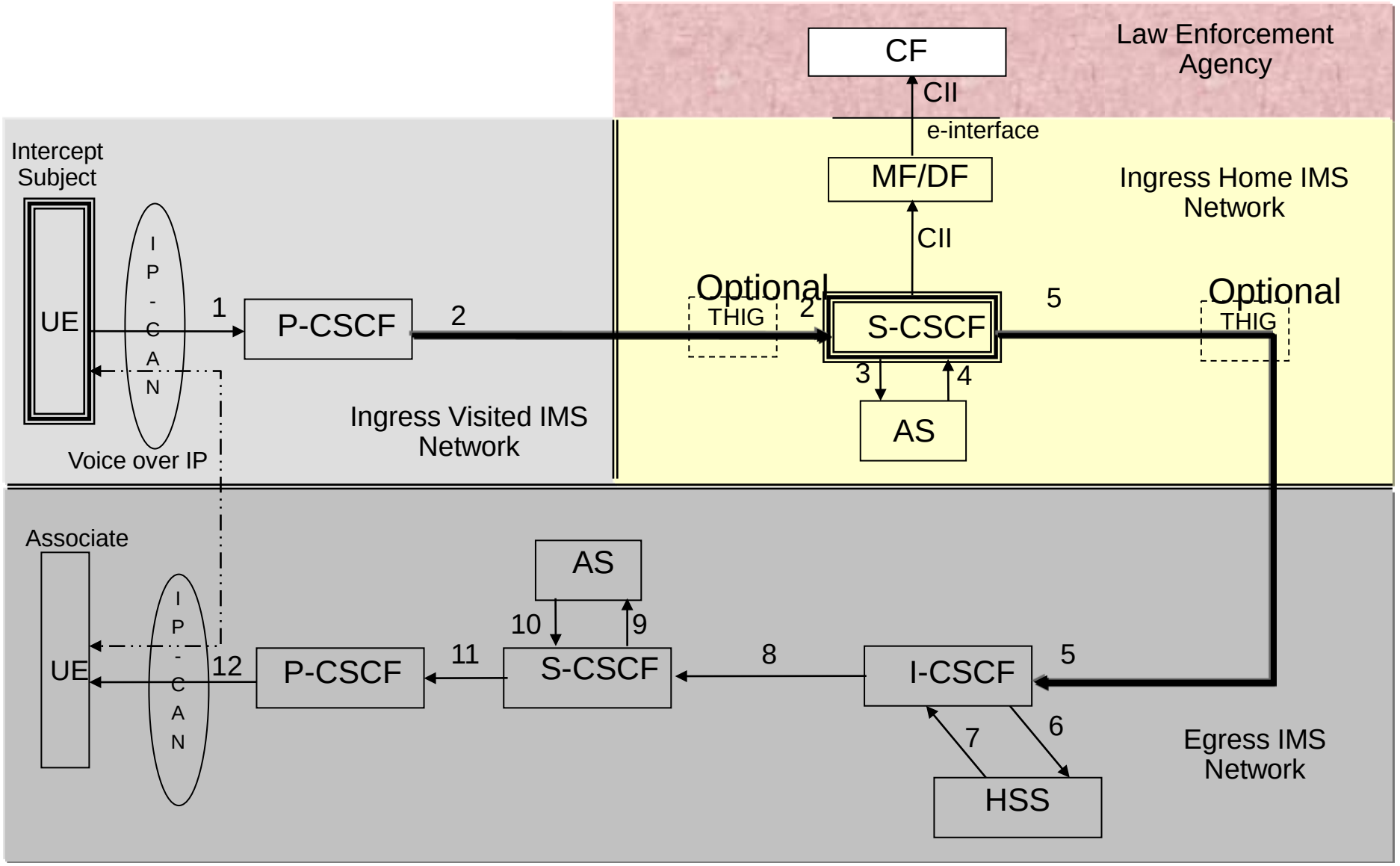

© Nokia Siemens Networks

Call Forwarding Unconditional – IMS to IMS forwarded to IMS

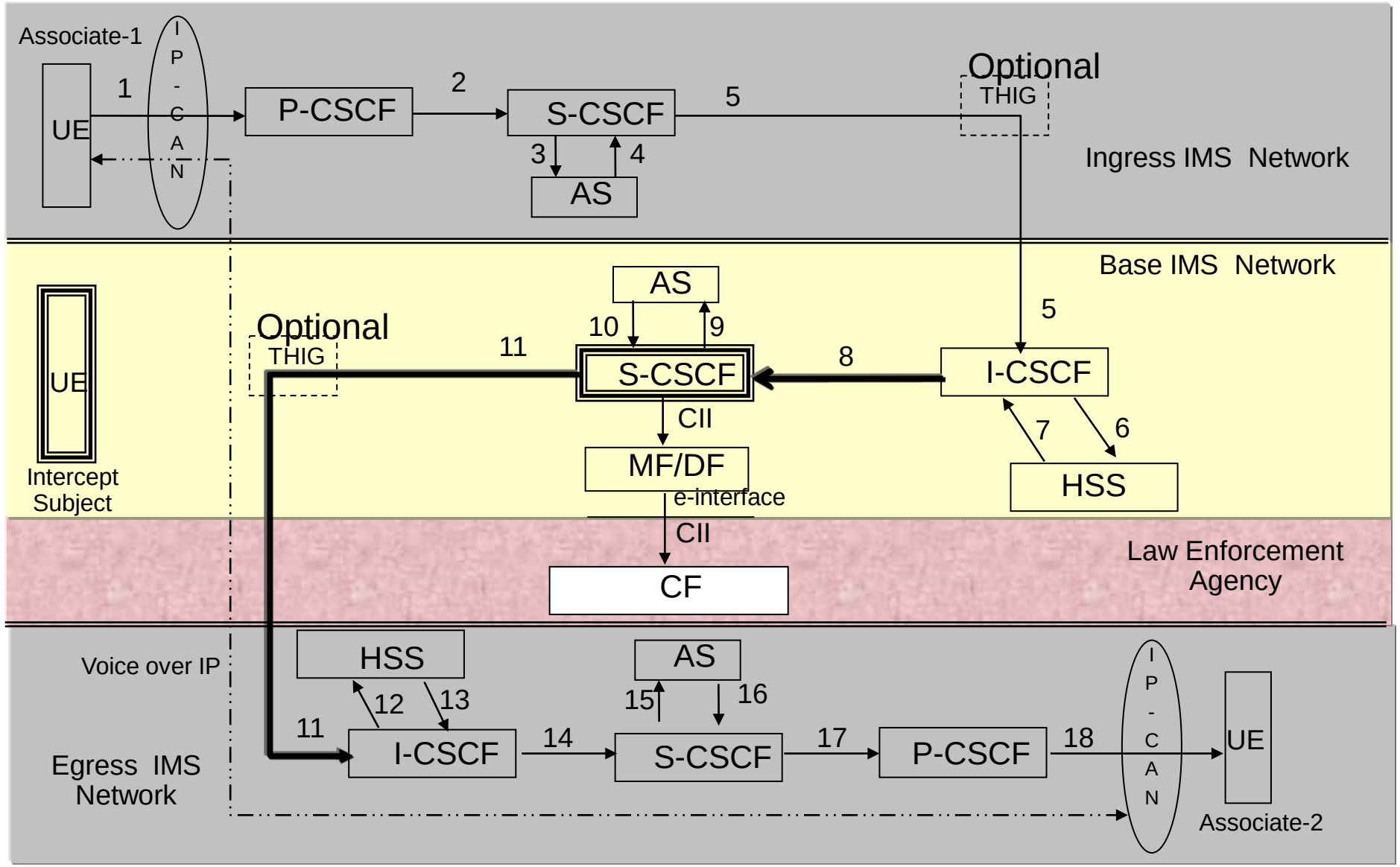

© Nokia Siemens Networks

Call Forwarding Unconditional – PSTN to IMS forwarded to PSTN

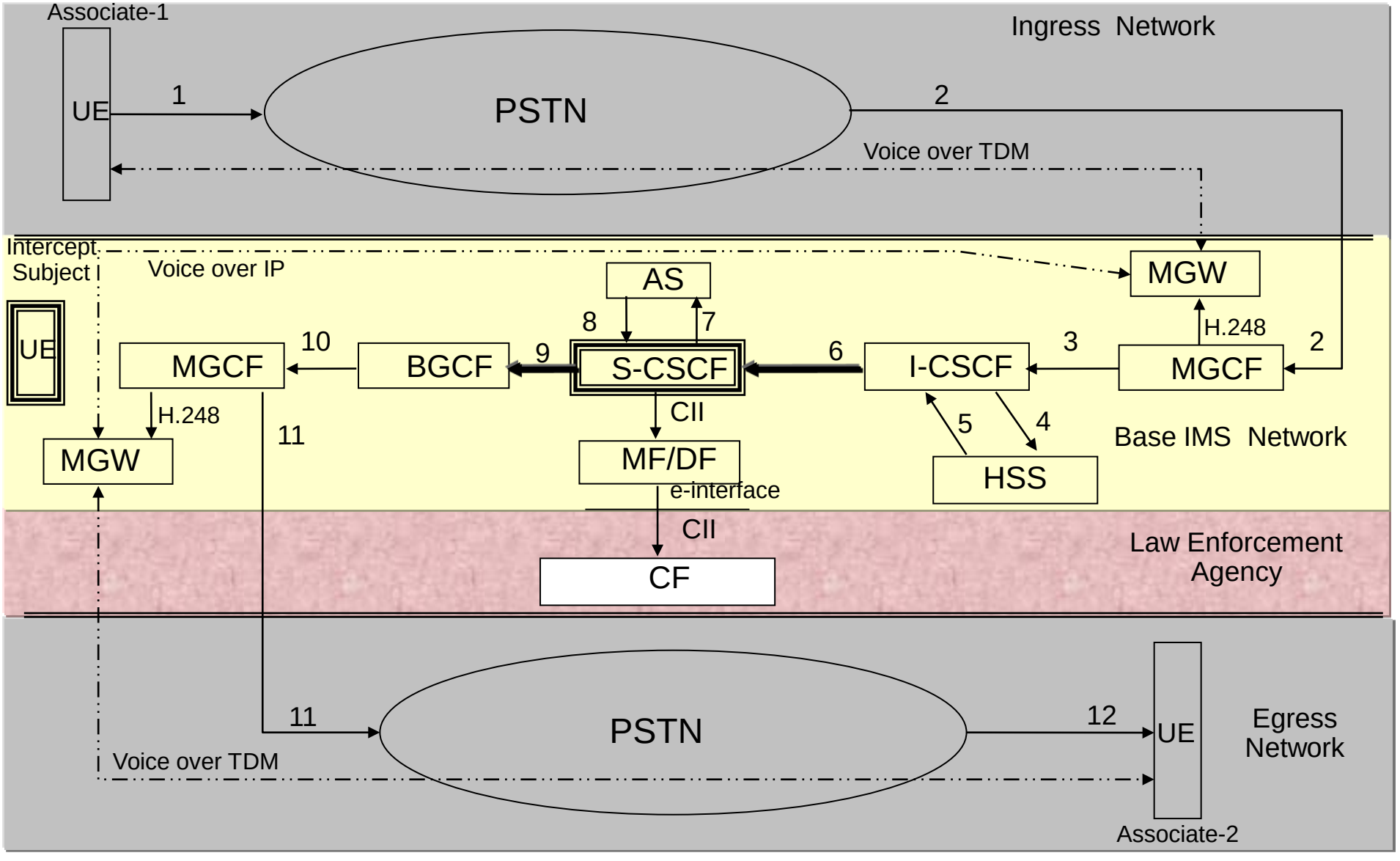

© Nokia Siemens Networks

Solutions

Business Need

© Nokia Siemens Networks

CC Interception in Call Forwarding (a method)

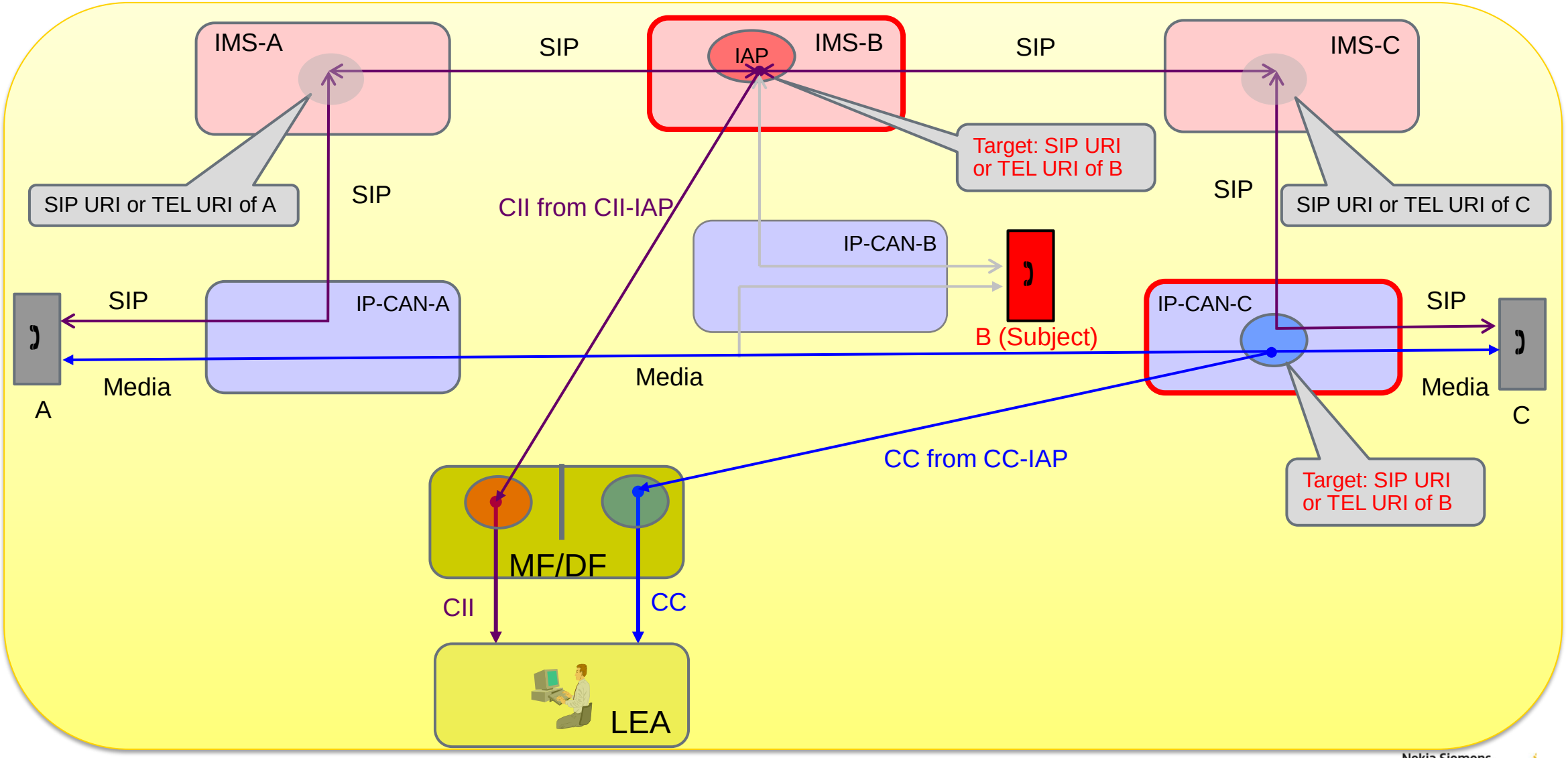

© Nokia Siemens Networks

CC Interception in Call Forwarding (another method)

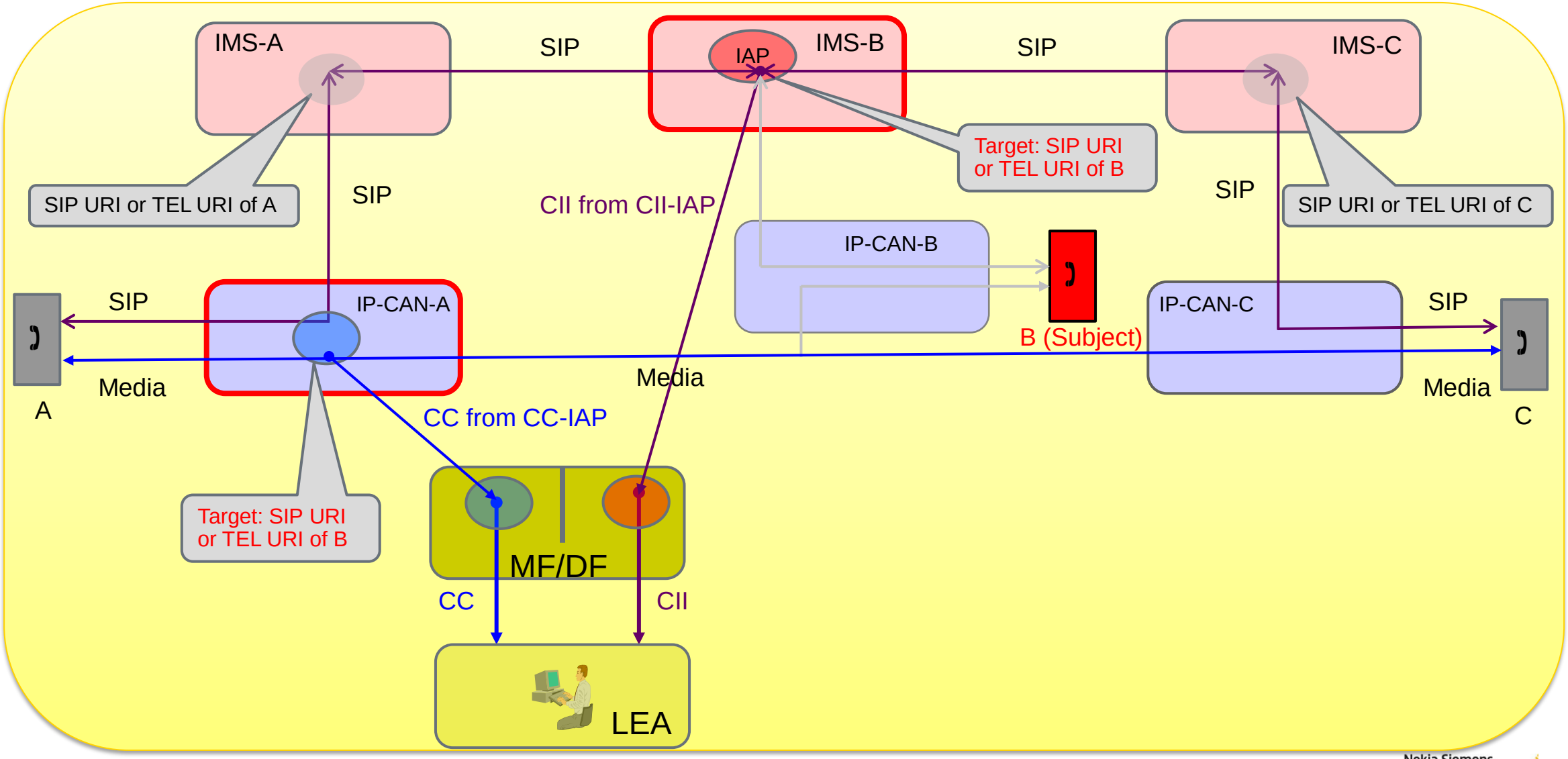

© Nokia Siemens Networks

Or, Other Methods

© Nokia Siemens Networks

A Sample Call Flow

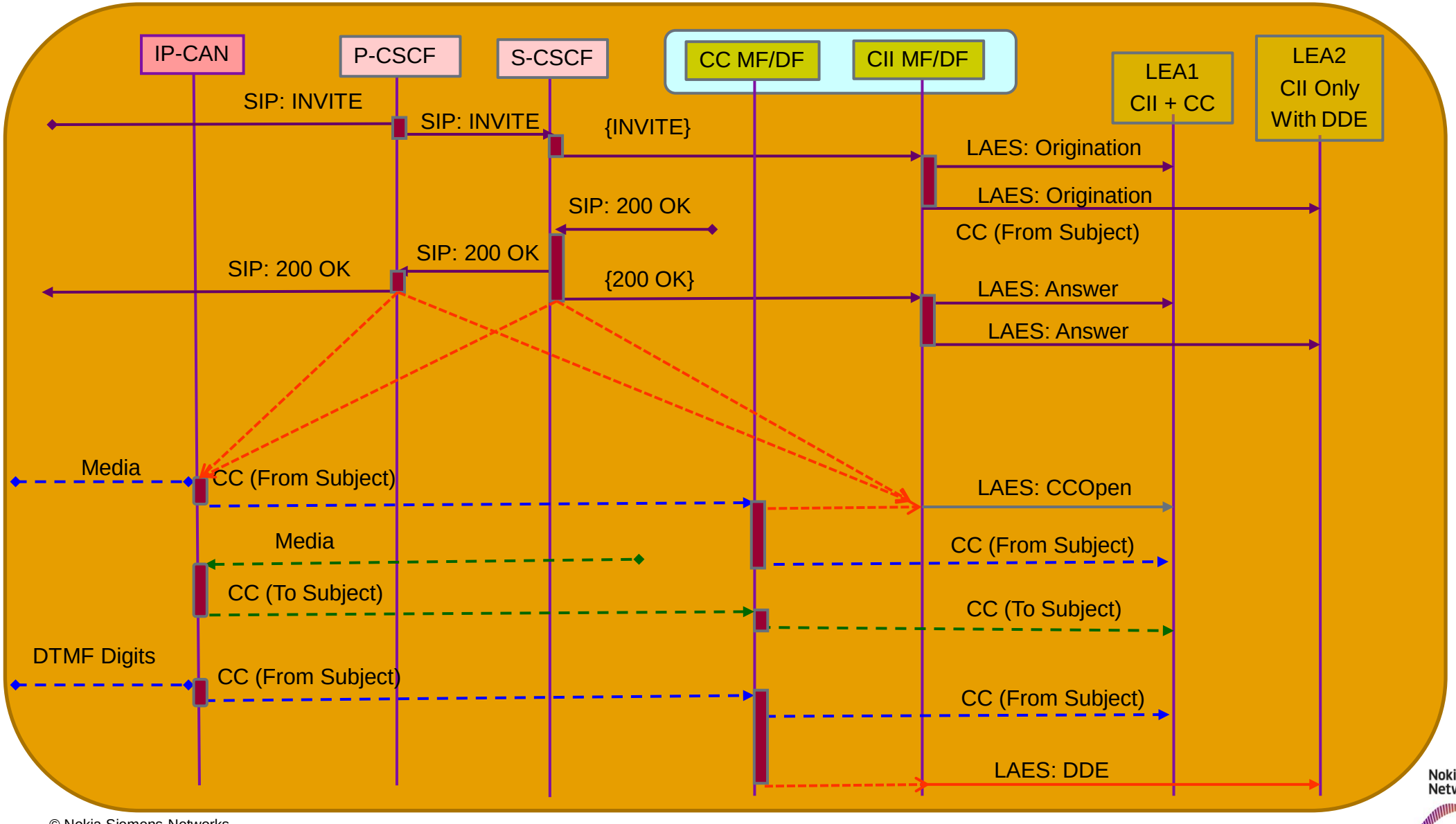

© Nokia Siemens Networks

LAES Model in ETSI TC LI

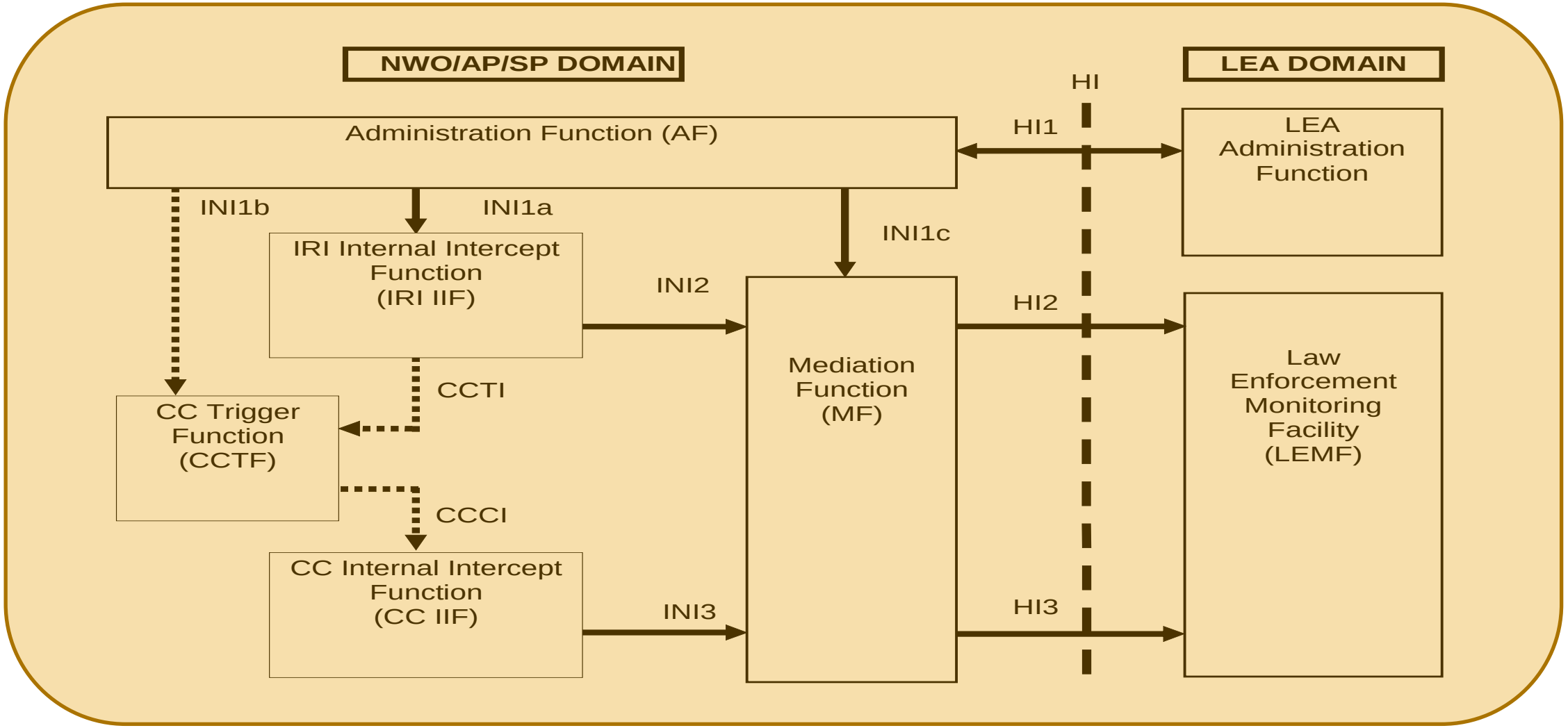

© Nokia Siemens Networks

Conclusion

© Nokia Siemens Networks

New WTSC-LI Issue: CC Interception for IMS-based VoIP

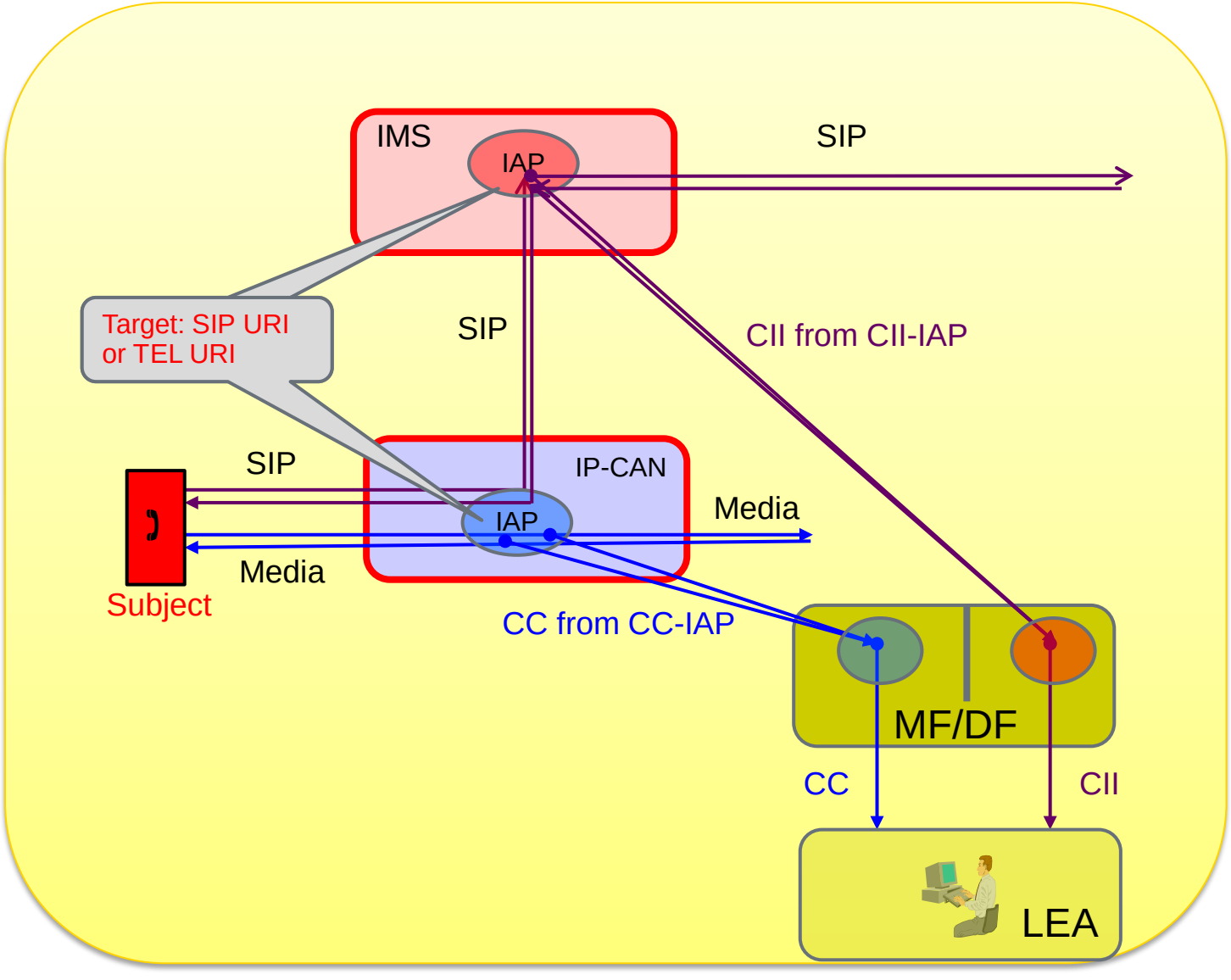

- Only one Subject Identifier (SIP URL or TEL URL) for CII and CC Interception
- Intercept only voice packets as CC;
- CC interception for forwarded calls;
- Dynamic CC-IAP identification;
- Generation of CC-related events (CCOpen, CCClose);
- Extraction of DTMF digits from Subject voice-stream & generate DDE event.
- Correlation of CC with CII
- Real time interface to CC-IAP to trigger CC interception;
- Security measures to shield the intercept data

© Nokia Siemens Networks