S2-072929

PCC Architecture Proposal for 23.402 based Networks

Vodafone, Verizon Wireless, China Mobile, NTT DoCoMo, KDDI,
U S Cellular, Samsung, Cisco, Alcatel-Lucent, Nortel, Qualcomm EUROPE, Motorola, LG Electronics

June, 2007

Non-Roaming Scenario – Alternative 1

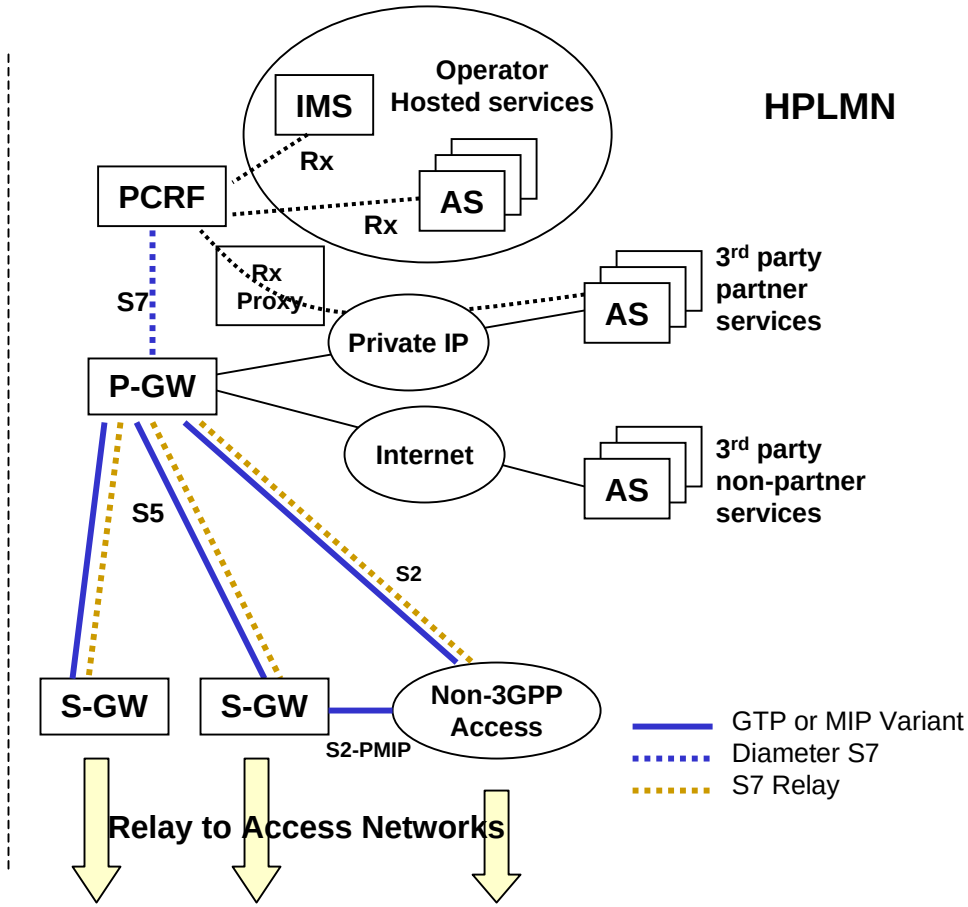

- P-GW is Anchor point for all access technologies
- S-GW is LMA for PMIP-based access interfaces
- Centralized IP Flow Policy Enforcement Point in P-GW
- Centralized Charging and Authorization Functions in P-GW
- On-path out-of-band Diameter Signaling on IETF-based S5 or in-band signaling on GTP based S5
- Bearer binding in S-GW for IETF based S5

Non-Roaming Scenario – Alternative 2

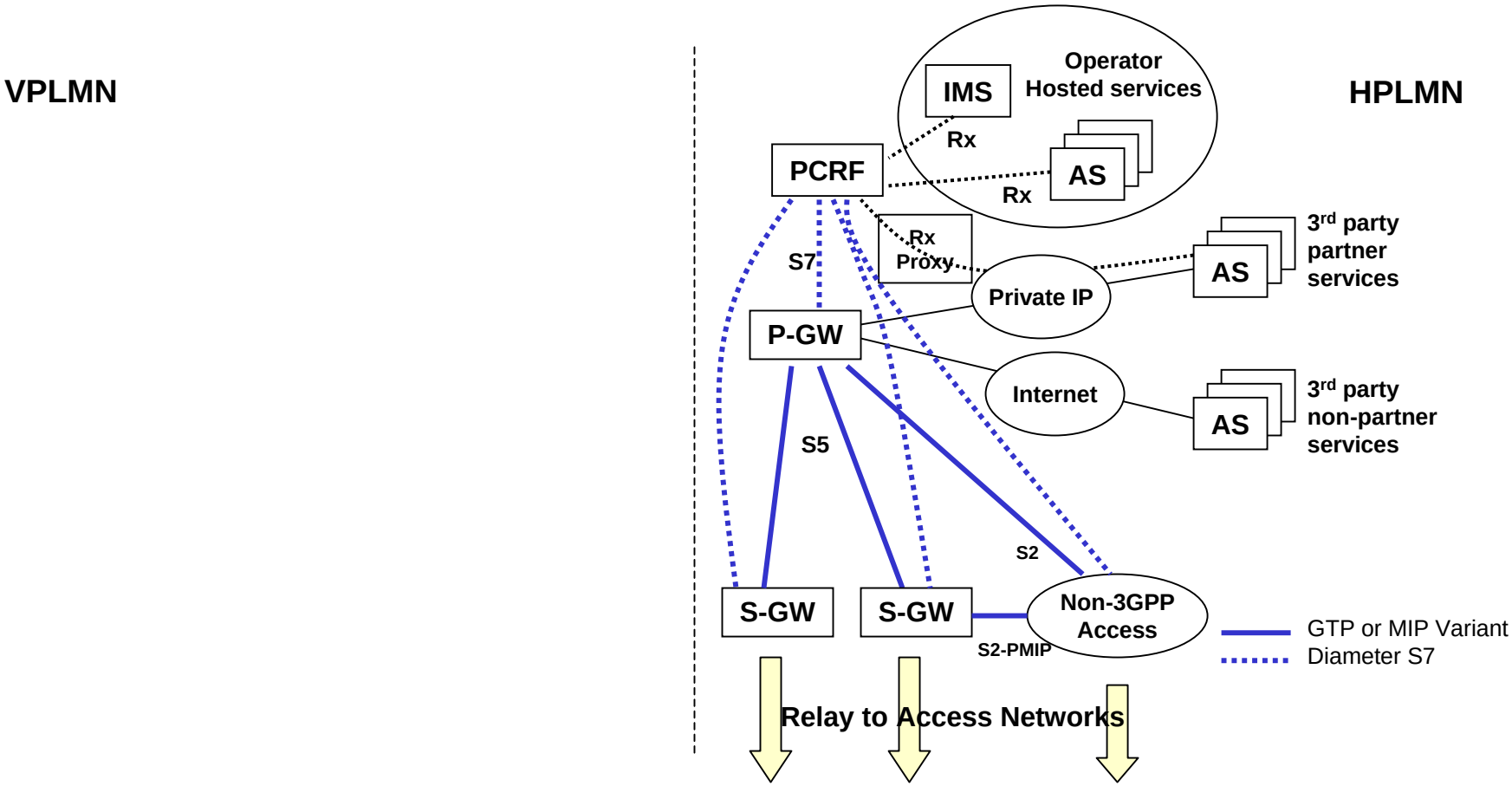

- P-GW is Anchor point for all access technologies
- S-GW is LMA for PMIP-based access interfaces
- Centralized Charging and Authorization Functions in P-GW
- Off-path Diameter Signaling S7 to the S-GW and non-3GPP accesses in HPLMN
- Distributed IP Flow Policy Enforcement, Basic accounting functions & Bearer binding in S-GW for IETF based S5

Roaming Scenario – Home Routed Traffic Only – Alternative 1

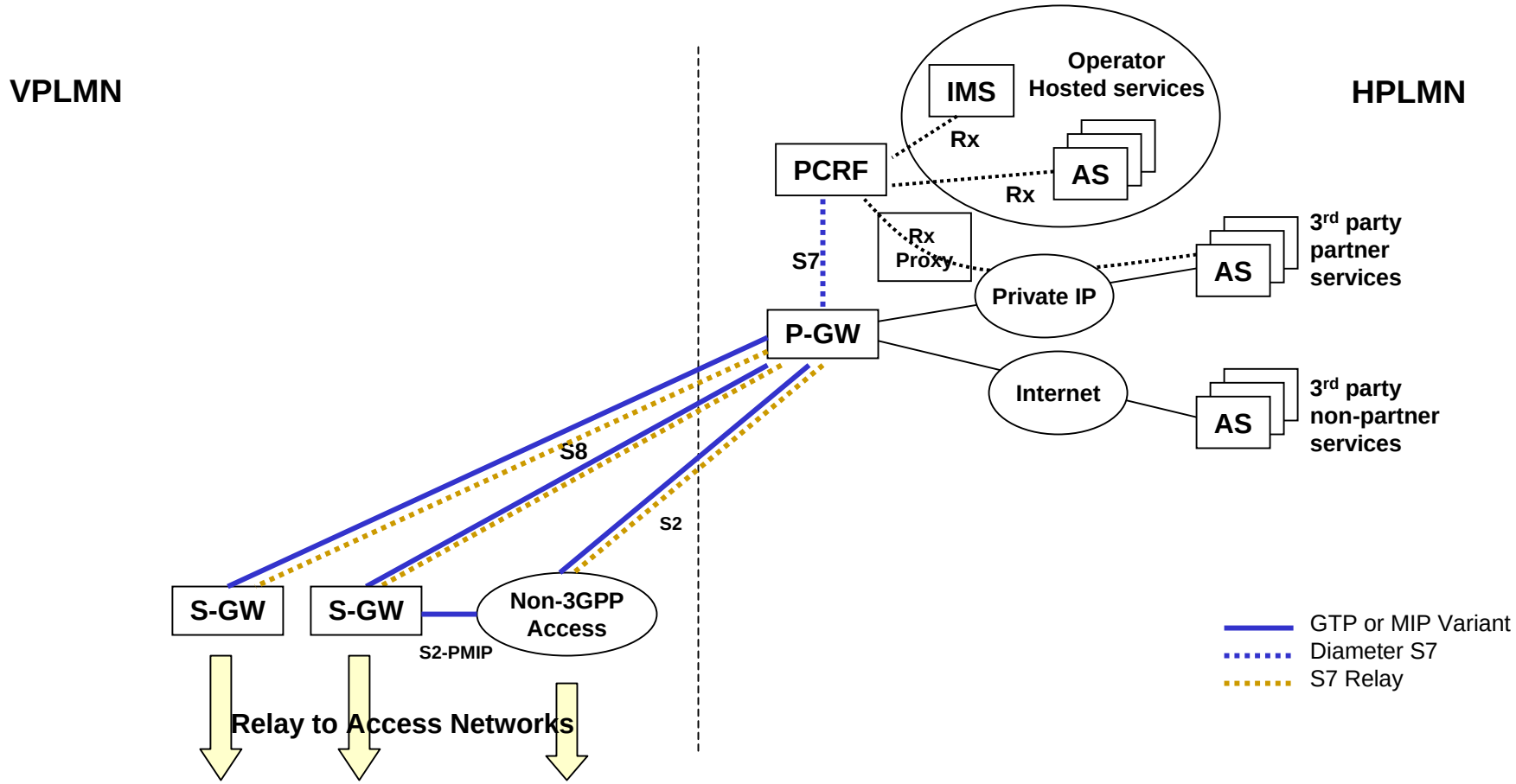

- hP-GW is Anchor point for all access technologies in VPLMN
- S-GW is LMA for PMIP-based access interfaces
- Centralized IP Flow Policy Enforcement point in hP-GW
- Centralized Charging and Authorization Functions in hP-GW
- On-path out-of-band Diameter Signaling on IETF based S8b or in-band signaling on GTP based S8a
- Basic accounting functions and Bearer binding in S-GW in VPLMN for IETF based S8

Roaming Scenario – Home Routed Traffic Only – Alternative 2

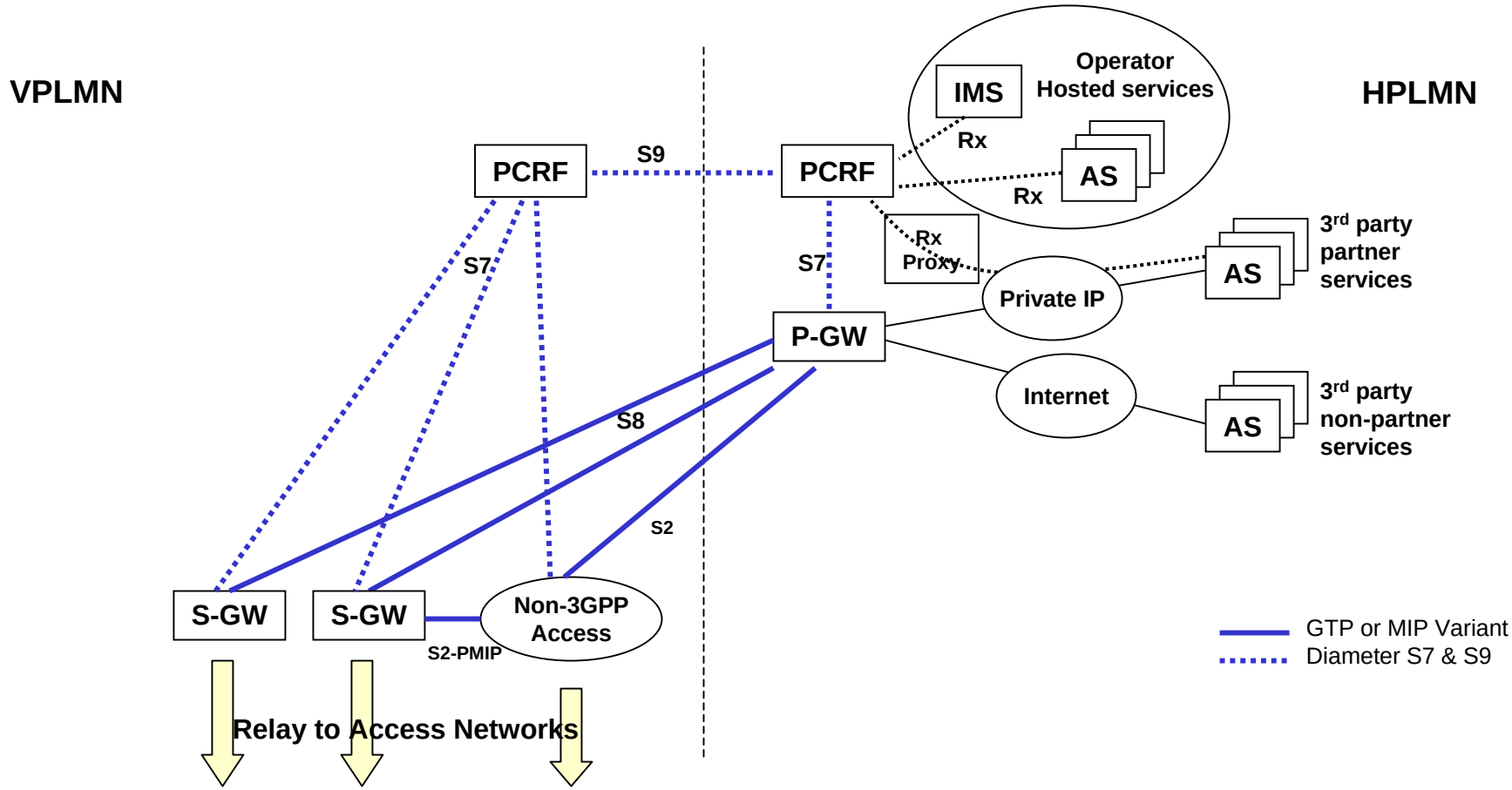

- S-GW is LMA for PMIP-based access interfaces
- Off-path Diameter Signaling on Reference Point S9 between hPCRF and vPCRF
- Off-path Diameter signaling using S7 to S-GW and non-3GPP accesses in VPLMN
- Centralized Charging and Authorization Functions in hP-GW
- Distributed IP Flow Policy Enforcement, Basic accounting functions & Bearer binding in S-GW in VPLMN for IETF based S8

Roaming Scenario – Visited Traffic Only – Alternative 1

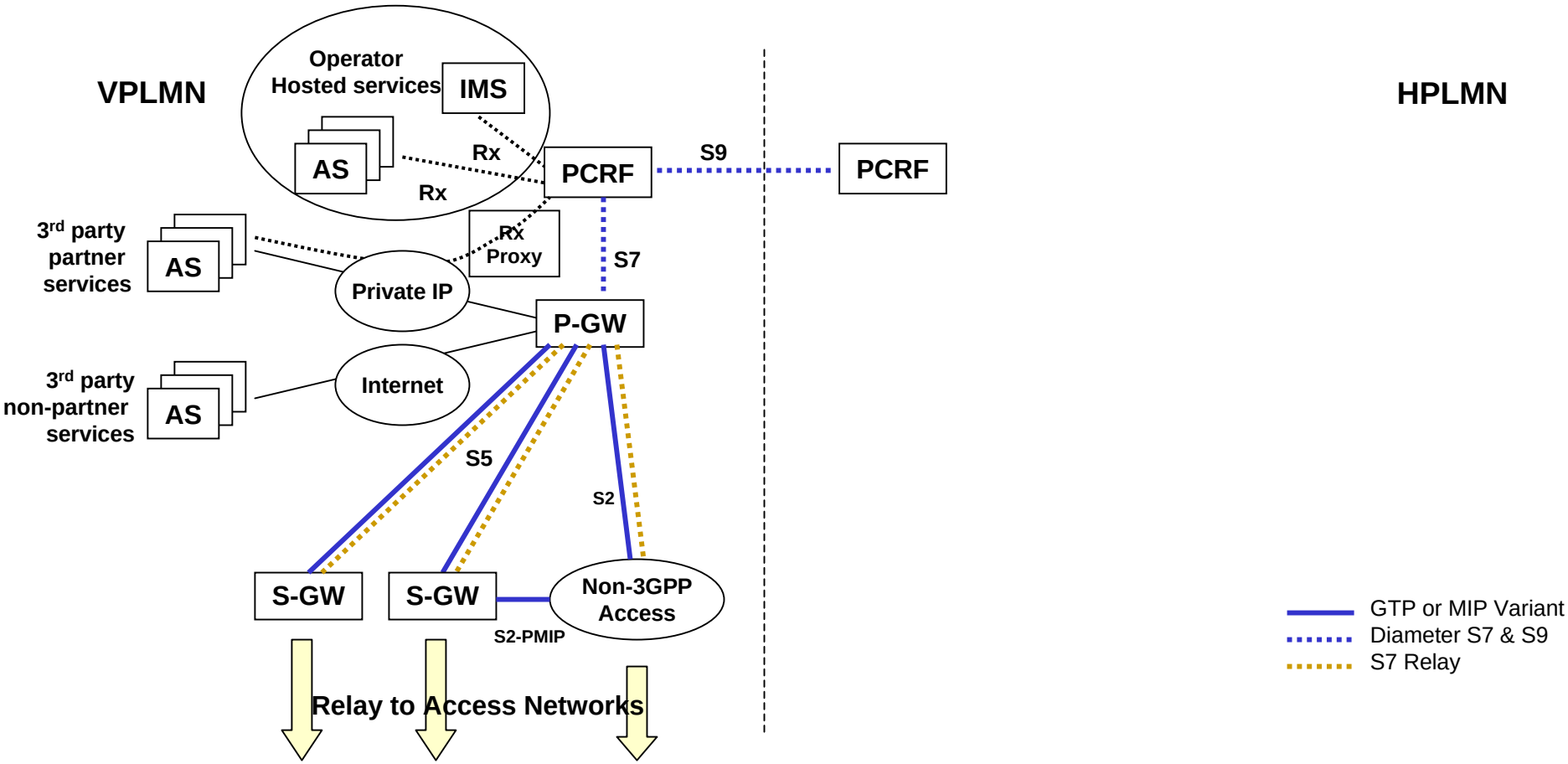

- Off-path Diameter Signaling on Reference Point S9 from HPLMN for visited network services (e.g. obtain relevant parts of subscription profile from hPCRF)
- On-path out-of-band Diameter signaling on IETF-based S5 or in-band signaling for GTP on S5
- Centralized IP Flow Policy Enforcement point in vP-GW only
- Centralized Charging and Authorization Functions in vP-GW only
- Bearer binding in S-GW in VPLMN for IETF based S8

Roaming Scenario – Visited Traffic Only – Alternative 2

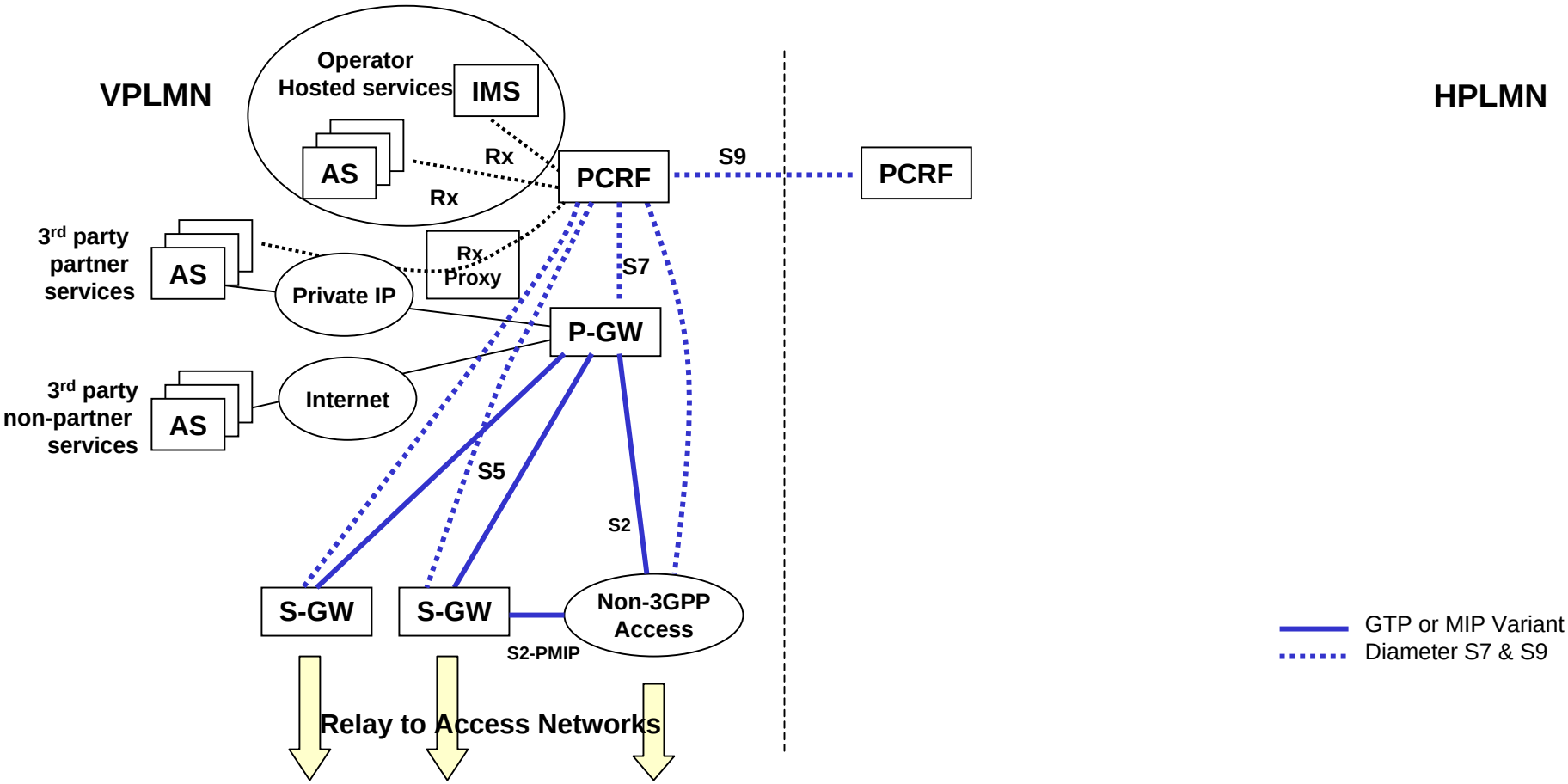

- Off-path Diameter Signaling on Reference Point S9 for visited network services
  - (e.g. obtain relevant parts of subscription profile)
- Off-path Diameter signaling on S7 to S-GW and non-3GPP accesses in VPLMN
- Centralized Charging and Authorization Functions in vP-GW
- Distributed IP Flow Policy Enforcement Point, Basic accounting functions and Bearer binding in S-GW in VPLMN for IETF based S5

Roaming Scenario – Hybrid (Home & Visited) – Alternative 1

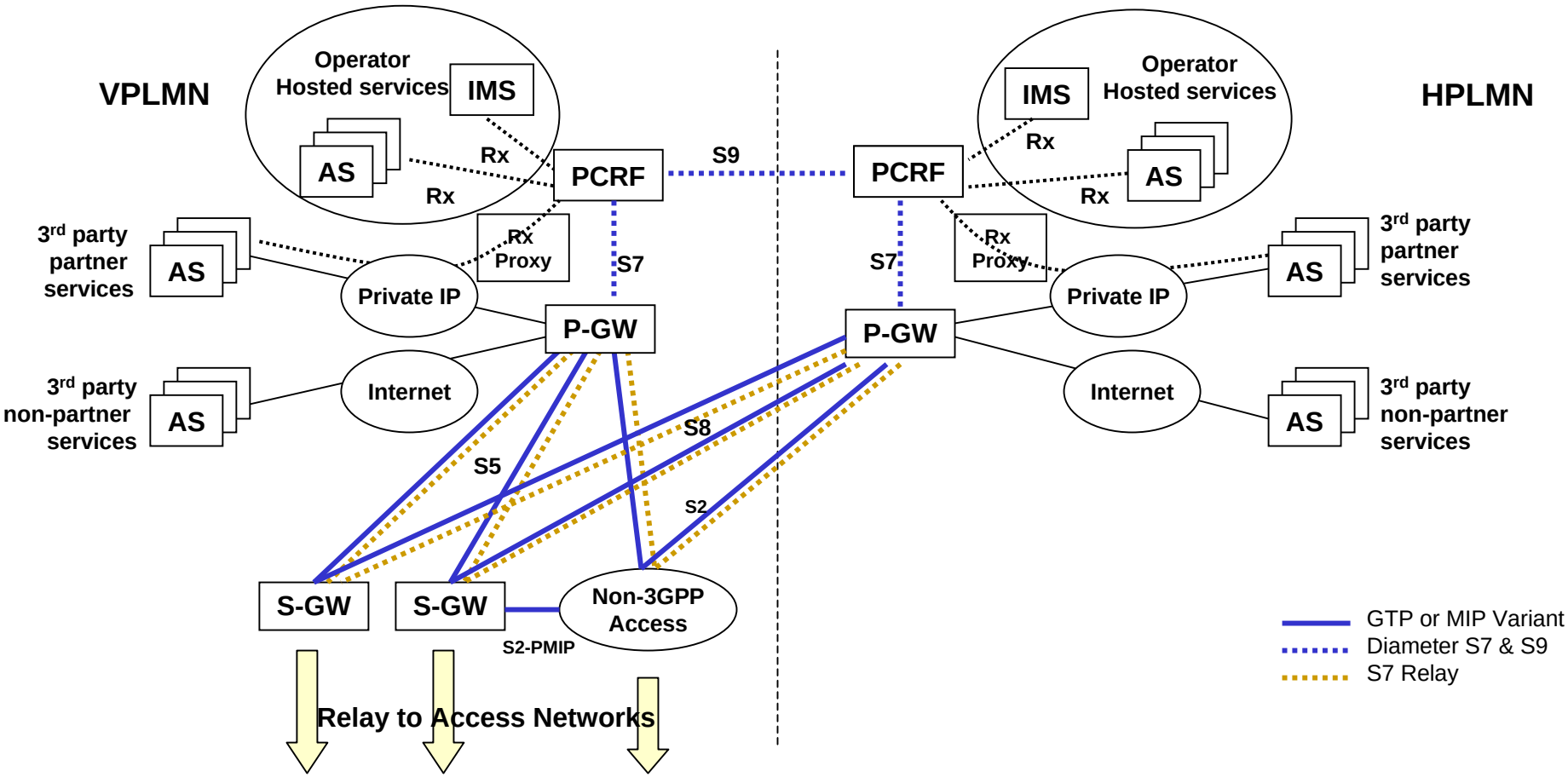

- UE has independent IP addresses for home and visited traffic
- Off-path Diameter Signaling on Reference Point S9 from hPCRF to vPCRF for Visited network services
- On-path out-of-band Diameter signaling for IETF-based S5b & S8b or GTP for S5 and S8a
- Distributed IP Flow Policy Enforcement Point in hP-GW, vP-GW and vS-GW
- Centralized Charging and Authorization Functions in hP-GW and vP-GW
- IP Flow awareness, basic accounting functions and bearer binding in vS-GW

Roaming Scenario – Hybrid (Home & Visited) – Alternative 2

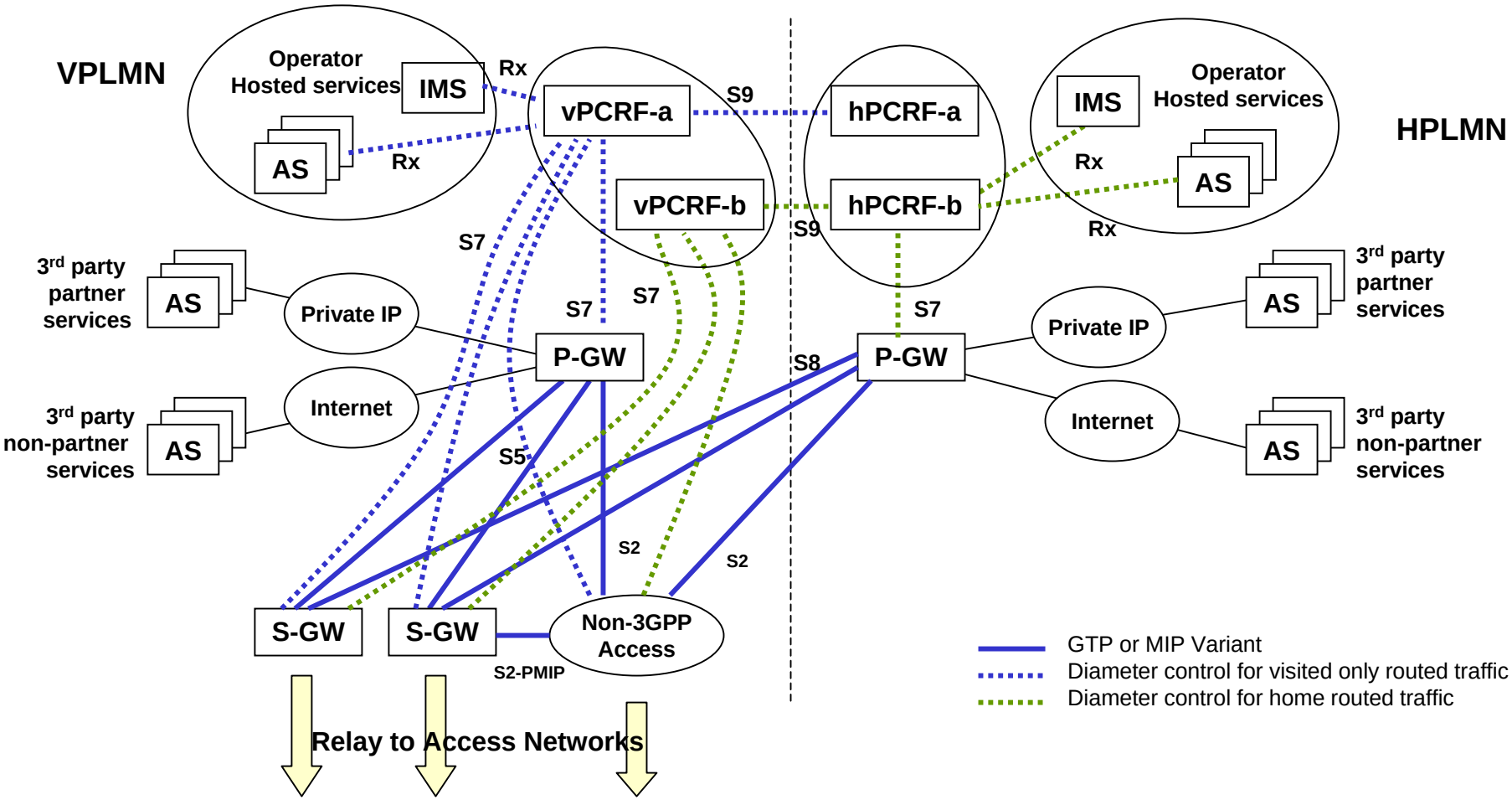

- UE has independent IP addresses for home and visited traffic
- Off-path Diameter Signaling on Reference Point S9 between hPCRF and vPCRF
- Off-path Diameter signaling for IETF-based S5b & S8b
- Distributed IP Flow Policy Enforcement Point in hP-GW, vP-GW and vS-GW
- Centralized Charging and Authorization Functions in hP-GW and vP-GW
- IP Flow awareness, basic accounting functions and bearer binding in vS-GW

Recommended Direction

- Select Alternative 2 for off-path signaling to the S-GW (if IETF variant S5/S8 is selected)
- Non-Roaming Scenario
  - P-GW is Anchor point for all access technologies
  - S-GW is LMA for PMIP-based access interfaces
  - Centralized Charging and Authorization Functions in P-GW
  - Off-path Diameter Signaling S7 to the S-GW and non-3GPP accesses in HPLMN
  - Bearer binding in S-GW for IETF based S5
- Home Routed Traffic Only
  - Off-path Diameter Signaling on Reference Point S9 between hPCRF and vPCRF
  - Off-path Diameter signaling using S7 to S-GW and non-3GPP accesses in VPLMN
  - Centralized Charging and Authorization Functions in hP-GW
  - Distributed IP Flow Policy Enforcement, Basic accounting functions and Bearer binding in S-GW in VPLMN for IETF based S8
- Visited Network traffic Only
  - Off-path Diameter Signaling on Reference Point S9 for visited network services
    - (e.g. obtain relevant parts of subscription profile)
  - Off-path Diameter signaling on S7 to S-GW and non-3GPP accesses in VPLMN
  - Centralized Charging and Authorization Functions in hP-GW
  - Distributed IP Flow Policy Enforcement Point, basic accounting functions and Bearer binding in S-GW in VPLMN for IETF based S5
- Hybrid (Home and Visited) Traffic
  - Independent IP addresses for home and visited traffic
  - hP-GW knows the IP address of vS-GW from the Binding update. This is sent to hPRCF (hPCRFb) to vPCRF (vPRCFb) (via S9) which will download the policies to the correct vS-GW (via S7)
  - vP-GW does NOT take part in home routed traffic
  - PCRF -a and -b in their respective networks may coincide (for P-CSCF in HPLMN) or be separate (for P-CSCF in VPLMN)
  - Home routed traffic and local breakout traffic (with two separate IP addresses) follow separate paths for the policy downloads
  - PCEF will be performed by vP-GW (local breakout) and by hP-GW (home routed)
  - Centralized Charging and Authorization Functions in hP-GW and vP-GW
  - Basic accounting functions in vS-GW
  - vS-GW will perform the mapping between SDF and bearers (bearer binding)

Revised 23.402 Non-Roaming Architecture

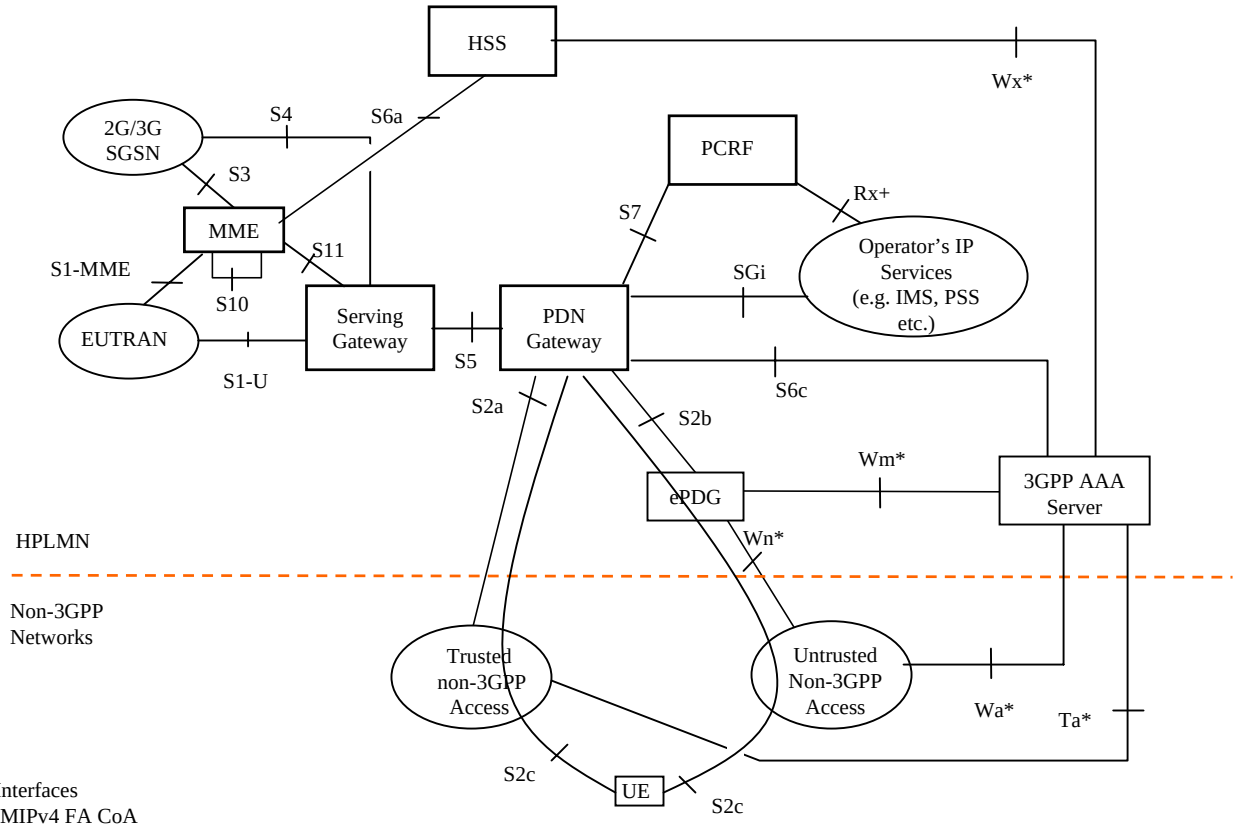

Protocols on IETF Interfaces
S2a = PMIPv6 or CMIPv4 FA CoA
S2b = PMIPv6
S2c = DS-MIPv6
S5 = PMIPv6
S8b = PMIPv6

Revised 23.402 Roaming Architecture – Home Routed w/o LBO

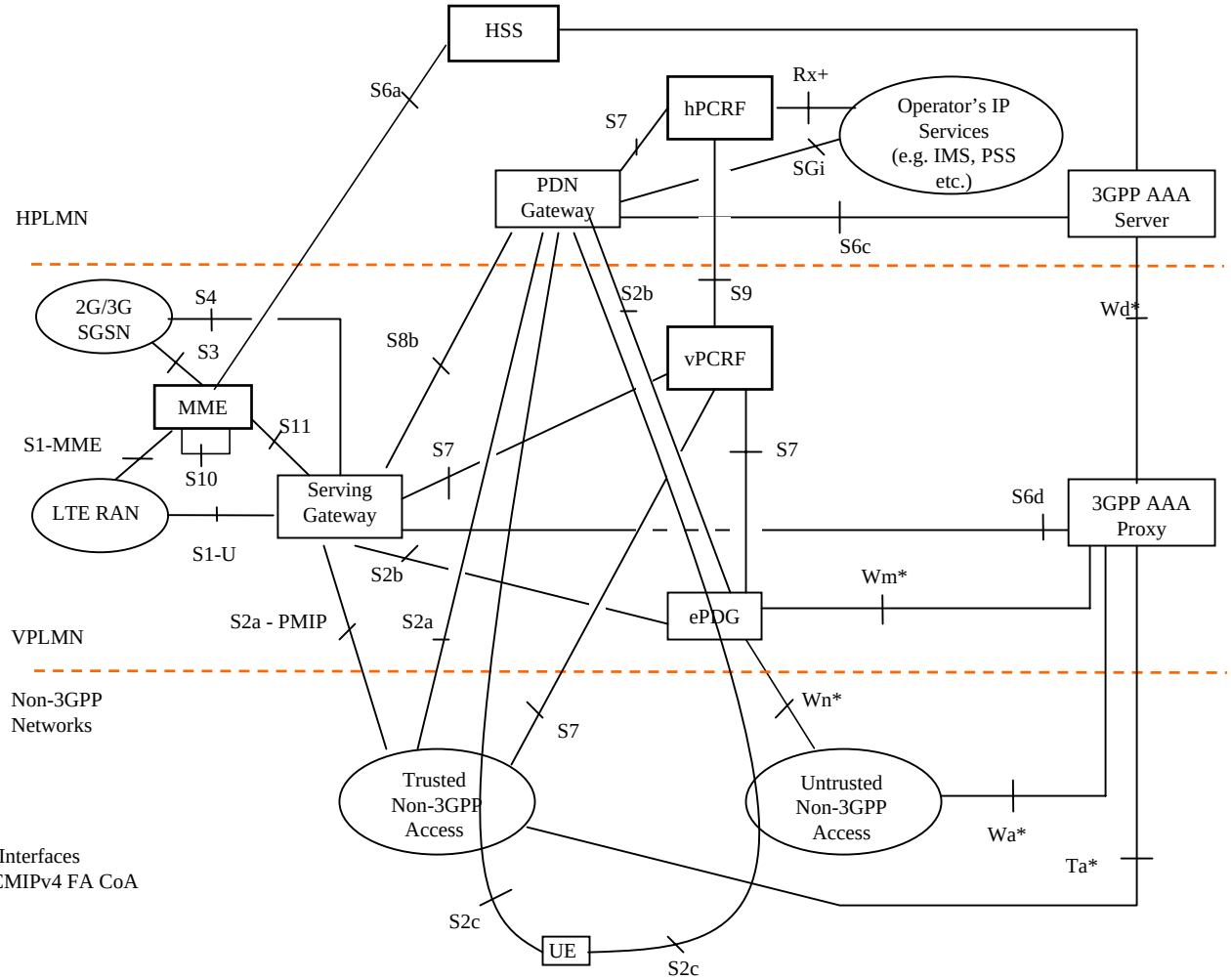

Protocols on IETF Interfaces
S2a = PMIPv6 or CMIPv4 FA CoA
S2b = PMIPv6
S2c = DS-MIPv6
S5 = PMIPv6
S8b = PMIPv6

Revised 23.402 Roaming Architecture – Home Routed w/ LBO

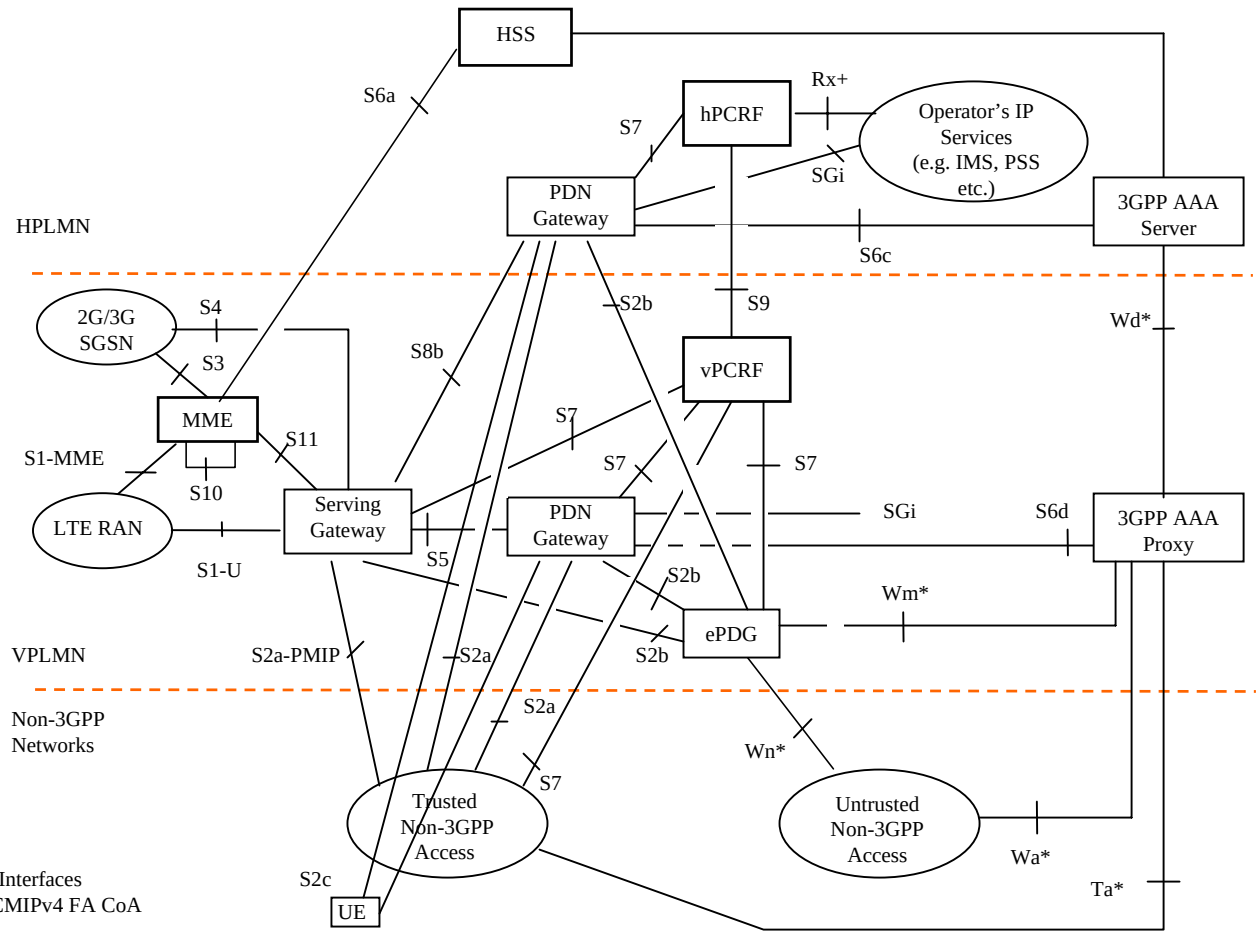

Protocols on IETF Interfaces
S2a = PMIPv6 or CMIPv4 FA CoA
S2b = PMIPv6
S2c = DS-MIPv6
S5 = PMIPv6
S8b = PMIPv6

- S2c can also go from UE to PDN Gateway via Untrusted Non-3GPP Access and ePDG