**TSG-RAN WG4 AH#4-2010** **R4-103881**
**Xi'an, China, 11th – 15th, October 2010**

**Source:** Motorola

**Title:** TRS measurement results, under the influence of USB cable connection.

**Agenda item:** 6.2

**Document for:** Discussion

## 1. Introduction

This is a follow-up contribution presenting data collected in fully functional handset, measured at similar circumstances as described in the contribution R4-103869.

## 2. Test setup

The DUT adopted in this study is a Dual Band Single Mode CDMA (US bands) handset.

The test setup is a SISO 5m full anechoic chamber with spherical scanning, the DUT was positioned in the center of the chamber guided by a LASER system, first positioned stand alone in free space, then connected to a generic (off) laptop (with lid in close position) through a 1.2m USB cable. In all measurements the main antenna is facing the azimuth 0°.

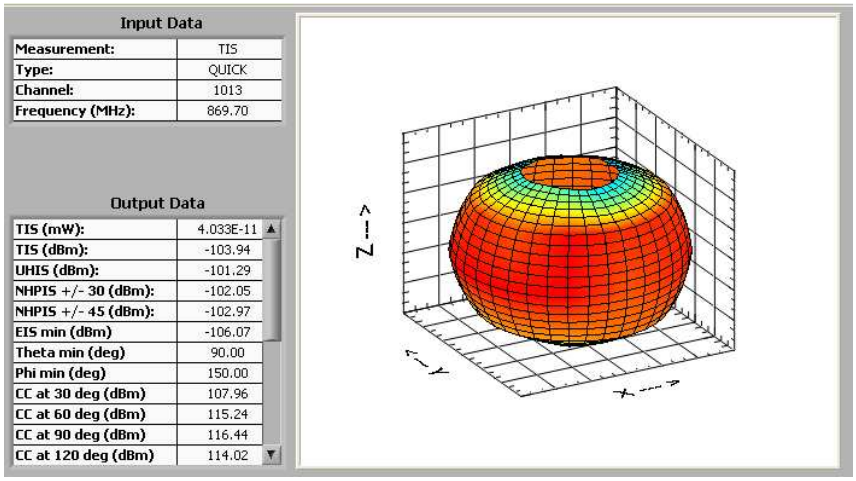


Figure #1, Free Space High Power TRS

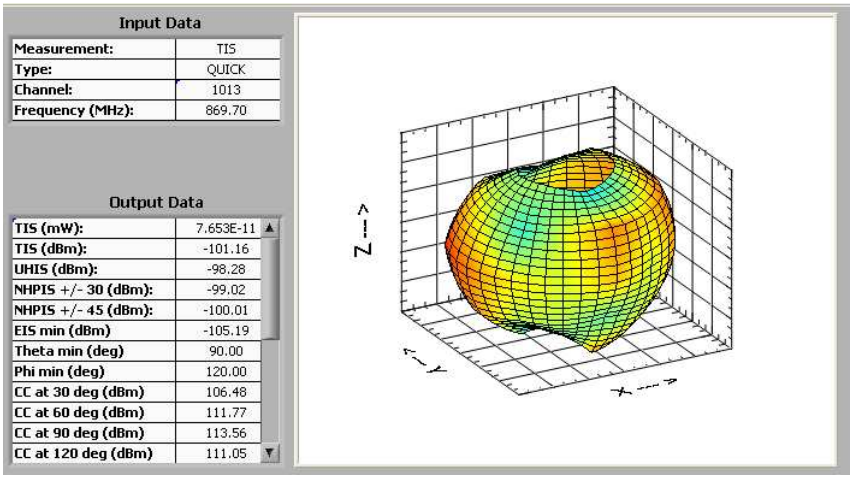


Figure #2, DUT connected to Laptop (off) High Power TRS

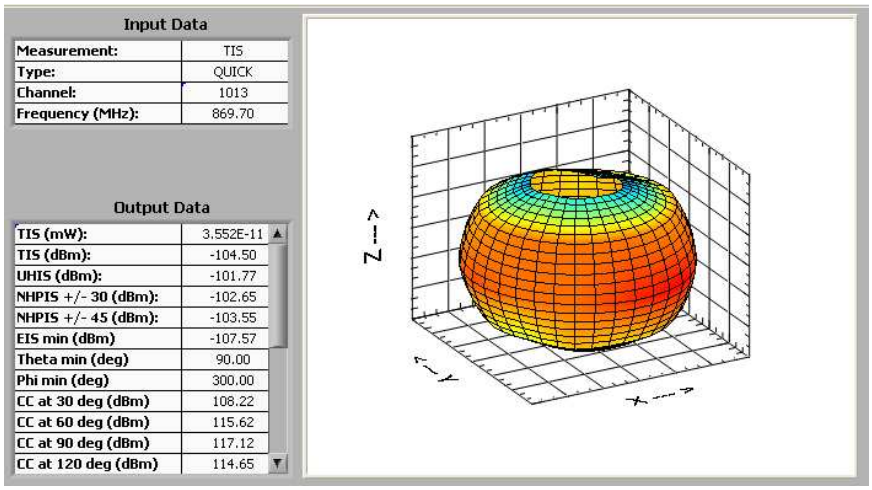

| Input Data | |
|---|---|
| Measurement: | TIS |
| Type: | QUICK |
| Channel: | 1013 |
| Frequency (MHz): | 869.70 |

| Output Data | |
|---|---|
| TIS (mW): | 3.552E-11 |
| TIS (dBm): | -104.50 |
| UHIS (dBm): | -101.77 |
| NHPIS +/- 30 (dBm): | -102.65 |
| NHPIS +/- 45 (dBm): | -103.55 |
| EIS min (dBm) | -107.57 |
| Theta min (deg) | 90.00 |
| Phi min (deg) | 300.00 |
| CC at 30 deg (dBm) | 108.22 |
| CC at 60 deg (dBm) | 115.62 |
| CC at 90 deg (dBm) | 117.12 |
| CC at 120 deg (dBm) | 114.65 |



Figure #3, Free Space Low Power TRS

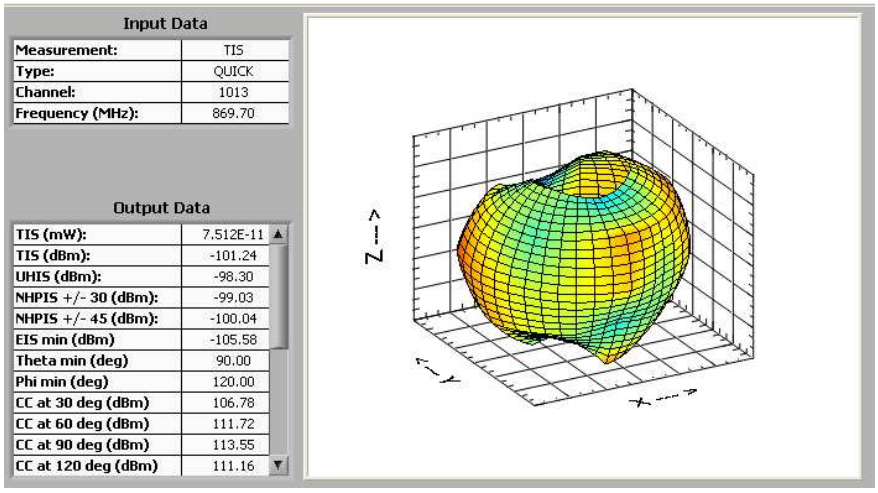

| Input Data | |
|---|---|
| Measurement: | TIS |
| Type: | QUICK |
| Channel: | 1013 |
| Frequency (MHz): | 869.70 |

| Output Data | |
|---|---|
| TIS (mW): | 7.512E-11 |
| TIS (dBm): | -101.24 |
| UHIS (dBm): | -98.30 |
| NHPIS +/- 30 (dBm): | -99.03 |
| NHPIS +/- 45 (dBm): | -100.04 |
| EIS min (dBm) | -105.58 |
| Theta min (deg) | 90.00 |
| Phi min (deg) | 120.00 |
| CC at 30 deg (dBm) | 106.78 |
| CC at 60 deg (dBm) | 111.72 |
| CC at 90 deg (dBm) | 113.55 |
| CC at 120 deg (dBm) | 111.16 |



Figure #4, DUT connected to Laptop (off) Low Power TRS

## 3. Conclusion

The TRS data collected in this DUT, confirms conclusions presented in previous contributions, where it was demonstrated through simulations and fixture measurements, that the un-choked USB cable not only altered the DUT reference ground plane, but also generates undesirable reflections in the anechoic test environment altering final results. As can be seeing on figures # 2 and 4, the TRS measured with USB cable introduce artificial nulls in the handset radiation pattern, therefore affecting negatively the final TRS results.

These measurements were taken with final shipping product, therefore no subject to prototype uncertainty. In both test setups (High & Low uplink power), the difference in TRS between free space and USB connection was 2.78 and 3.26dB respectively.

## 4. References

[1] R4-103869, “Antenna System Figure of Merit. Techniques and Trade-offs probing antennas on LTE”
[2] R4-103524, “OTA Parameters Study when the DUT Connected to the Laptop through a Cable”