INTERNATIONAL TELECOMMUNICATION UNION

ITU-T

TELECOMMUNICATION
STANDARDIZATION SECTOR
OF ITU

G.8273/Y.1368

Amendment 1

(01/2015)

SERIES G: TRANSMISSION SYSTEMS AND MEDIA, DIGITAL SYSTEMS AND NETWORKS

Packet over Transport aspects – Synchronization, quality and availability targets

SERIES Y: GLOBAL INFORMATION INFRASTRUCTURE, INTERNET PROTOCOL ASPECTS AND NEXT-GENERATION NETWORKS

Internet protocol aspects – Transport

Framework of phase and time clocks

Amendment 1

CAUTION !

PREPUBLISHED RECOMMENDATION

This prepublication is an unedited version of a recently approved Recommendation. It will be replaced by the published version after editing. Therefore, there will be differences between this prepublication and the published version.

FOREWORD

The International Telecommunication Union (ITU) is the United Nations specialized agency in the field of telecommunications, information and communication technologies (ICTs). The ITU Telecommunication Standardization Sector (ITU-T) is a permanent organ of ITU. ITU-T is responsible for studying technical, operating and tariff questions and issuing Recommendations on them with a view to standardizing telecommunications on a worldwide basis.

The World Telecommunication Standardization Assembly (WTSA), which meets every four years, establishes the topics for study by the ITU-T study groups which, in turn, produce Recommendations on these topics.

The approval of ITU-T Recommendations is covered by the procedure laid down in WTSA Resolution 1.

In some areas of information technology which fall within ITU-T's purview, the necessary standards are prepared on a collaborative basis with ISO and IEC.

NOTE

In this Recommendation, the expression "Administration" is used for conciseness to indicate both a telecommunication administration and a recognized operating agency.

Compliance with this Recommendation is voluntary. However, the Recommendation may contain certain mandatory provisions (to ensure, e.g., interoperability or applicability) and compliance with the Recommendation is achieved when all of these mandatory provisions are met. The words "shall" or some other obligatory language such as "must" and the negative equivalents are used to express requirements. The use of such words does not suggest that compliance with the Recommendation is required of any party.

INTELLECTUAL PROPERTY RIGHTS

ITU draws attention to the possibility that the practice or implementation of this Recommendation may involve the use of a claimed Intellectual Property Right. ITU takes no position concerning the evidence, validity or applicability of claimed Intellectual Property Rights, whether asserted by ITU members or others outside of the Recommendation development process.

As of the date of approval of this Recommendation, ITU [had/had not] received notice of intellectual property, protected by patents, which may be required to implement this Recommendation. However, implementers are cautioned that this may not represent the latest information and are therefore strongly urged to consult the TSB patent database at http://www.itu.int/ITU-T/ipr/.

© ITU 2015

All rights reserved. No part of this publication may be reproduced, by any means whatsoever, without the prior written permission of ITU.

Amendment 1 to Recommendation ITU-T G.8273/Y.1368 (2013)

Framework of phase and time clocks: Amendment 1

Summary

Amendment 1 to Recommendation ITU-T G.8273/Y.1368 (2013) adds a reference to Recommendation ITU-T G.8263/Y.1363, adds text to clause B.4, and adds the following Appendices:

- Appendix I “Variable temperature testing methodology”.
- Appendix II “Variable temperature holdover testing methodology”.

Amendment 1 to Recommendation ITU-T G.8273/Y.1368 (2013)

Framework of phase and time clocks: Amendment 1

1 Clause 2 References

Add the following reference:

[ITU-T G.8263] ITU-T Recommendation G.8263 (2012), *Timing Characteristics of Packet based Equipment Clocks (PEC)*

2 Annex B.4

Replace:

"Measurement methods for Transparent Clocks are ffs."

With:

B.4.1 Active Measurement Setup for Systems with Telecom Transparent Clocks

Figure B.4.1 shows an active measurement setup for a T-TC.

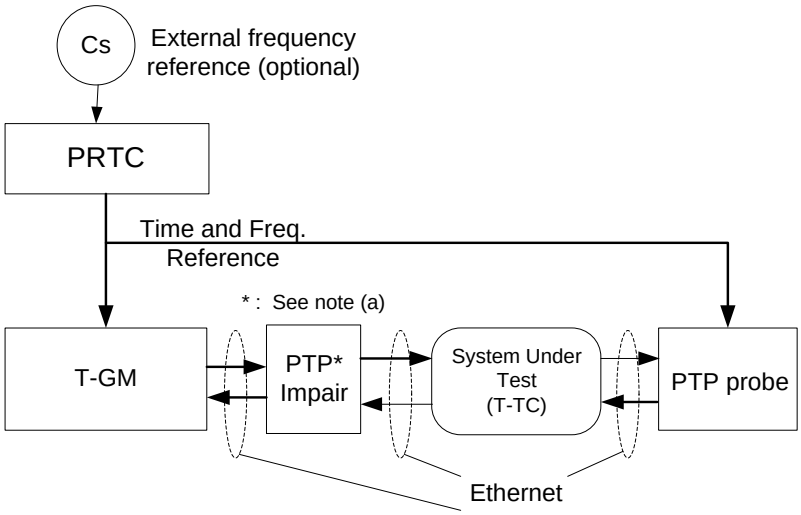

Figure B.4.1 - Active Measurement setup for Systems with T-TC

With respect to the test arrangement shown:

a. One PTP Impair function is used to emulate network impairments between the SUT and the GM in order to perform stress testing, where necessary, of the PEC function of the T-TC.

b. Suitable means are provided for injecting interfering traffic to mimic network loading conditions. The non-PTP traffic loading must include the ports carrying the PTP traffic.

c. When calculating the T-TC noise generation and noise transfer using the above setup, the PTP impairment must be known and compared with the PTP probe measurements.

B.4.2Passive measurement setup for Systems with Telecom Transparent Clocks

Figure B.4.2 shown a passive measurement setup for a T-TC.

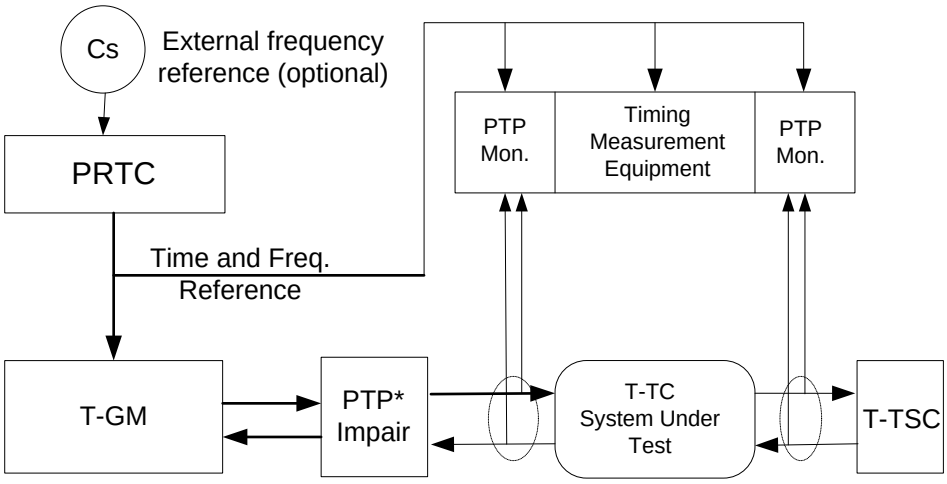

Figure B.4.2: Measurement setup for Systems with T-TC

The statements regarding the test arrangement provided in clause B.4.1 for the active measurement set up apply to the passive measurement set up shown in Figure B.4.2.

3 Appendices

Add the following Appendixes after Annex B:

Appendix I “Variable temperature testing methodology”

Appendix II “Variable temperature holdover testing methodology”.

Appendix I

Variable temperature testing methodology

(This appendix does not form an integral part of this Recommendation.)

Where variable temperature testing is required, it should be conducted using the temperature profile shown in Figure I.1.

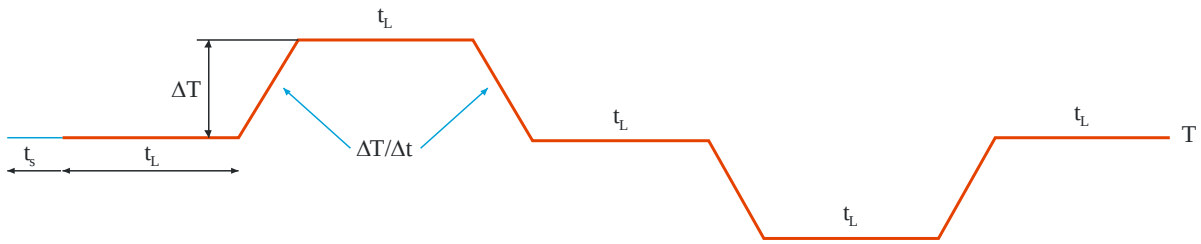

Figure I.1 – Temperature profile

The test should be repeated at different test reference temperatures, T, to cover the required temperature range. As a minimum the tests should be performed at nominal and temperature extremes, i.e., the reference temperature T set to Tmin + ΔT, Tnom and Tmax – ΔT.

The test stabilisation time t_s should be long enough to remove start-up effects. The loop recovery time tL is dictated by the loop time constant and should be as a minimum three times the loop time constant to allow the loop to recover.

The constrained temperature excursion ΔT and the ramp rate ΔT/Δt should aligned to the environmental profile.

As an example, the constrained temperature excursion ΔT could be set to 20°C and the ramp rate ΔT/Δt to 0.5°C/minute, if these are the applicable environmental condition.

An additional consideration is the abruptness of the transition between ramping and constant temperature conditions. The second derivative of temperature versus time that occurs at such transitions is relevant for properties such as the oscillator thermal control and system loop responses. If these transitions are applied too rapidly, it could cause unrealistic environmental conditions. The rate of change between ramping temperature and stable temperature conditions is for further study.

Appendix II

Variable temperature holdover testing methodology

(This appendix does not form an integral part of this Recommendation.)

Appendix I of this recommendation describes temperature profile for generic variable temperature testing. This appendix describes details for variable temperature holdover testing methodology.

For testing holdover, the duration of the test should correspond to the duration of the holdover period. The worst-case pattern is a temperature change that takes effect during the holdover period.

Figure II.1 depicts negative and positive slope cases. Various starting temperatures would be used to cover the operating temperature range.

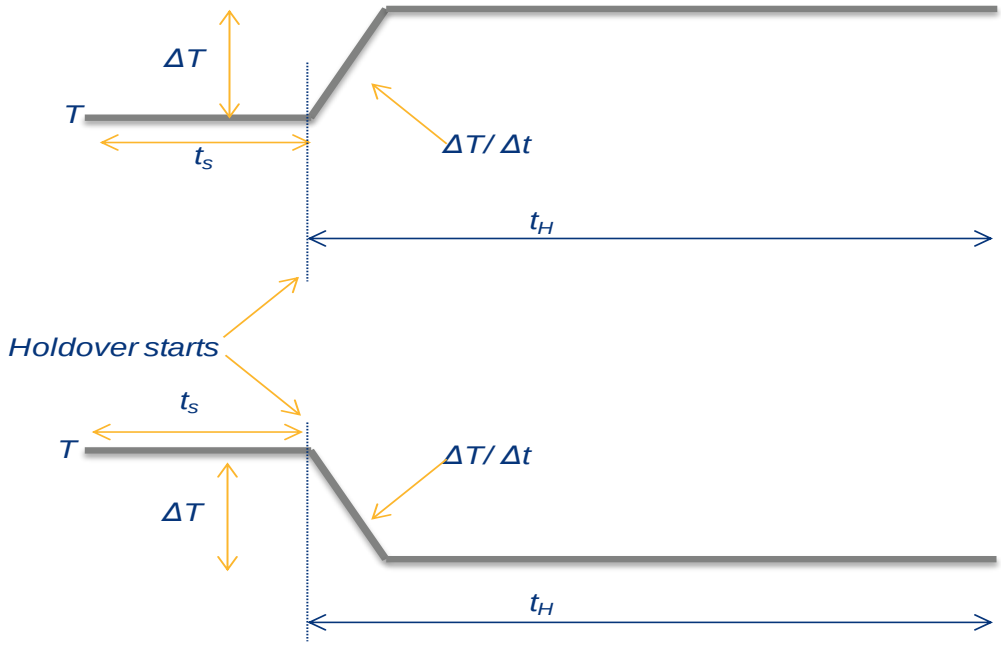

Figure II.1 Variable temperature profile for holdover testing.

The test should be repeated at different test reference temperatures *T*, to cover the required temperature range. At a minimum the tests should be performed at nominal and temperature extremes, i.e., the reference temperature *T* set to *Tmin* + *ΔT*, *Tnom* and *Tmax* – *ΔT*.

The test stabilisation time of t_s period should be long enough to remove start-up effects while t_H equates to the duration of the test for the corresponding period of the required holdover duration. The worst-case pattern is a temperature change that remains during the holdover period.

The constrained temperature excursion *ΔT* and the ramp rate *ΔT/Δt* should aligned to the environmental profile.

As an example, the constrained temperature excursion *ΔT* could be set to 20°C and the ramp rate *ΔT/Δt* to 0.5C/minute if these are the applicable environmental condition.