3GPP TSG RAN WG1 Meeting #110-bis-e **R1-2209081**
e-Meeting, October 10th – 19th, 2022

Source: Johns Hopkins University APL

Title: Discussion of Channel Access Mechanisms

Agenda item: 9.4.1.1

Document for: Discussion and Decision

1. Background

The Objective 2 of the Work Item Description (WID) on NR sidelink evolution [1] is to study and specify support for sidelink operation in the unlicensed bands with focus on the FR1 unlicensed bands, n46 and n96/n102. The agreements reached on this objective at the 3GPP TSG RAN WG1 #110 meeting are listed below [2].

Agreement

The following evaluation scenario can be used for evaluating performance of SL-U designs, resource allocation schemes, and coexistence study with another RAT in a shared channel.

- Scenario 1 (commercial use cases) – recommended:
  - Evaluation methodology baseline is NR-U from TR 38.889 with the following updates.
  - Indoor layout
    - Option 1: a pairs topology for SL-U from R1-2205033 – recommended

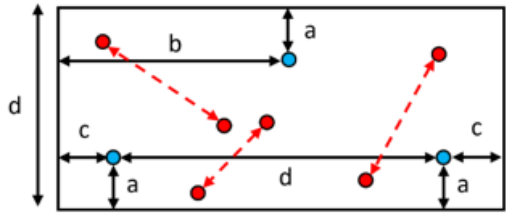

- a = 20m, b = 60m, c = 20m, d = 80 m
- There are two operators to model two RATs at a time. The red one is SL-U UE, the blue one is Wi-Fi or NR-U.
- For NR-U / Wi-Fi, the same number of UEs / Wi-Fi STA as the total number of SL-U devices are dropped in the area. The NR-U UE / Wi-Fi nodes are dropped uniformly per gNB/AP per 20 MHz.
  - Companies should report if they used a different number of UEs / Wi-Fi STA as the total number of SL-U devices, as an additional evaluation scenario.
- For evaluation of unicast traffic, the topology of SL-U is pair topology and the SL-U UEs are dropped uniformly at random in the area.
  - Companies should report how SL-U UEs are paired
  - 6 SL-U pairs and 4 NR-U UEs / Wi-Fi nodes per gNB/AP per 20 MHz
- For evaluation of groupcast traffic, SL-U UEs are dropped uniformly at random in the area, SL-UEs form groupcast UE group based on TX-RX UE distancing, the distance is provided by each company.
  - Companies should report how SL-U UEs form a group
  - 12 SL-U UEs and 4 NR-U UEs / Wi-Fi nodes per gNB/AP per 20 MHz
- For evaluation of broadcast traffic, SL-U UEs are dropped uniformly at random in the area.
  - 12 SL-U UEs and 4 NR-U UEs / Wi-Fi nodes per gNB/AP per 20 MHz

- Option 2: SL UE clusters (R1-2203146)

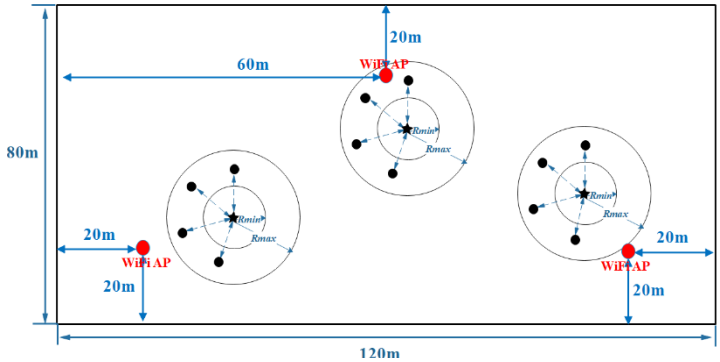

  - Indoor layout and UE dropping model with N = 3 or 6 clusters and each with M=5 UEs
  - Each cluster is a circle, with a central point and radius Rmax = 15 or 10m and Rmin = 5 or 1m
  - No overlapping among the N clusters
  - For coexistence, there are two operators to model two RATs at a time, where the red one is Wi-Fi AP or NR-U gNB. NR-U UE / Wi-Fi STA are dropped uniformly per gNB/AP.
  - Simulation bandwidth can be larger than 20MHz (e.g., 80MHz)
- Channel model follows NR InH Mixed Office model used in NR-U (TR38.889)
- Traffic model
  - Option 1: R17 sidelink commercial traffic model with periodic model 3 with packet size reduced by a factor of (high: 1; mid: 5; low: 10)
    - FFS whether/how the PDB requirement can be captured
  - Option 2: FTP model 3 with arrival rate satisfying one of the followings:
    - BO Low load: 10%~25%
    - BO Mid load: 35%~50%
    - BO High load: above 55%
  - Option 3: XR cloud gaming model in TR38.838
    - FFS whether/how the PDB requirement can be captured
  - It is up to each company to use either Option 1 or 2 or Option 3 or mixed of them
- Interference model:
  - Layout option 1: Explicit modelling of NR-U / WiFi transmissions (as per TR38.889)
  - Note, for the interference traffic model:
    - The same or equivalent traffic model setting as SL-U should be used as much as possible to achieve equal load (e.g., SL-U RAT offered load equal the interfering RAT's offered load).
    - The same number of traffic flows should be used between SL-U and the interfering RAT (e.g., 10 UEs with 10 flows, and 5 STAs with 2 flows each, one for DL and one for UL)
      - Companies should report if they used a different assumption, as an additional evaluation scenario.
- Performance metric: UPT, latency, and PRR which regards the packet whose delay exceeding the remaining PDB as transmission failure.
  - FFS: UE satisfaction/system capacity as section 7.2 in TR 38.838 for XR traffic evaluation
  - FFS for groupcast and broadcast
- Fair coexistence criterion between SL-U and the interfering RAT (e.g., according to NR-U TR38.889)

Agreement

- CW adjustment

- NR-U DL CW adjustment mechanism is used as the baseline for SL-U when SL-HARQ feedback is enabled in SCI for unicast
    - FFS any necessary update for SL-U operation
- FFS: how to determine CW size when SL-HARQ feedback is disabled in SCI
- FFS the case of groupcast option 1 (NACK-only) and groupcast option 2

Agreement

- Type 2A/2B/2C SL channel access procedures
    - Type 2A channel access procedure is applicable to the following case:
        - Transmission(s) by a UE following transmission(s) by another UE for a gap ≥ 25μs in a shared channel occupancy
        - FFS any other transmission by a UE (e.g., other than COT sharing)
        - FFS whether Type 2A is used also for the case of short control signalling transmission
    - Type 2B channel access procedure is applicable to the following case:
        - Transmission(s) by a UE following transmission(s) by another UE at least when the gap is 16μs in a shared channel occupancy
        - FFS the case when the gap is between 16 and 25us
        - FFS any other transmission by a UE (e.g., other than COT sharing)
    - Type 2C channel access procedure is applicable to the following case:
        - Transmission(s) by a UE following transmission(s) by another UE for a gap ≤ 16μs in a shared channel occupancy and the duration of the corresponding transmission is at most 584us.
        - FFS any other transmission by a UE (e.g., other than COT sharing)
        - FFS whether Type 2C is used also for the case of short control signalling transmission
    - FFS under which conditions (other than the gap) UEs can apply the Type 2A/2B/2C SL channel access procedures
    - FFS under which conditions Type 2B or Type 2C is applied in case of a gap of 16 μs

Agreement

Multi-consecutive slots transmission (MCSt) is supported for Mode 1 and Mode 2 resource allocation in SL-U.

- FFS details

Agreement

- For UE-to-UE COT sharing, continue considering the following alternatives:
    - Alt. 1: A responding SL UE can utilize a COT shared by a COT initiating UE when the responding SL UE is a target receiver of the at least COT initiating UE's PSSCH data transmission in the COT.
        - When the responding UE uses the shared COT for its transmission has an equal or smaller CAPC value than the CAPC value indicated in a shared COT information
        - FFS any additional conditions
    - Alt. 2: A responding SL UE can utilize a COT shared by a COT initiating UE when the responding SL UE is a target receiver of the COT initiating UE's transmission in the COT.
        - When the responding UE uses the shared COT for its transmission has an equal or smaller CAPC value than the CAPC value indicated in a shared COT information
        - FFS how to determine a SL UE is a target receiverFFS: details of the channel type of the COT initiating UE's transmission
        - FFS any additional conditions
    - For Alt1 and Alt2: When a responding UE uses a shared COT for its transmission(s), the COT initiating UE is a target receiver of the responding UE's transmission(s).
        - FFS: details of the channel type of the responding UE's transmission(s)
- gNB relaying/forwarding a UE initiated COT to another UE is not supported in Rel-18
- FFS whether a Mode 1 UE can report a COT or related information to gNB for aiding Mode 1 RA

Agreement

For PSCCH and PSSCH in SL-U:

- Both R16/R17 NR SL contiguous RB-based and interlace RB-based transmissions similar to R16 NR-U are supported

Agreement
For PSCCH and PSSCH in SL-U:
- For interlace RB-based transmission
  - Frequency domain resource allocation granularity is one sub-channel for PSSCH transmission
  - 1 sub-channel equals K interlace
    - FFS: whether K is fixed as 1 or (pre-)configured
  - Discuss whether one or both of the following alternatives are supported
    - Alt 1: 1 sub-channel is confined within 1 RB set
    - Alt 2: 1 sub-channel spans 1 or multiple RB set(s) belonging to a resource pool

Agreement
To meet OCB and PSD requirement for PSFCH transmission, at least RB-based interlace is supported at least for 15 kHz and 30 kHz SCS, FFS details.

Agreement
If RAN1 decides that LBT is performed for S-SSB transmission, in addition to the S-SSB occasions in R16/R17 NR SL design, support additional candidate S-SSB occasions
- FFS the number and locations of additional candidate S-SSB occasions
- FFS when a UE transmits S-SSB on such additional candidate S-SSB occasions, and the related Rx UE's behavior

Agreement
Regarding PSFCH transmission, at least the followings alternatives can be further studied
- Alt 1: each PSFCH transmission occupies a common interlace and zero or one or more dedicated PRB(s)
- Alt 2: each PSFCH transmission occupies an interlace, and may or may not further apply code domain enhancement (e.g., OCC, PRB-level cyclic shifts)
- Alt 3: each PSFCH transmission occupies some dedicated PRBs and some common PRBs
- FFS details of above alternatives

Agreement
If RAN1 decides that LBT is performed for PSFCH transmission, for the time and frequency domain locations of PSFCH resources, at least the followings alternatives can be further studied
- Alt 1: PSFCH resources are (pre-)configured
- Alt 2: PSFCH resources are dynamically indicated
- Combination of above alternatives are not precluded
- FFS details of above alternatives

Agreement
For S-SSB and synchronization in SL-U:
- No changes on R16 NR SL S-PSS/S-SSS sequence generation
- Continue studying the 4 options from the previous agreement and whether/how temporary exemption of OCB requirement is applicable for S-SSB transmission, e.g., how to meet the minimum of 2 MHz requirement under 15 kHz SCS

Agreement
For PSCCH and PSSCH resource indication in time/frequency domain:
- For time domain: R16 NR SL TRIV is reused as baseline
- For frequency domain:
  - further study sub-channel indexing and resource indication
- FFS: whether any enhancement needed on R16 NR SL TRIV/FRIV if new feature is introduced in SL-U, e.g., multi-slot consecutive transmission

2. Discussion

This section expands on some of the Agreements reached on channel access mechanism issues at the TSG RAN WG1 #110 [2] and #109-e Meetings [3].

2.1 Multiple Channels

At RAN1 #109-e it was agreed to support channel access procedure for transmission on multiple channels in a shared carrier as follows [3]:

Agreement

Channel access procedures for transmission(s) on multiple channels are supported for NR sidelink operation as defined by TS37.213 for NR-U (wherever applicable)

- FFS whether the downlink, uplink and/or semi-static multiple channel access procedure(s) (if supported) from NR-U should be used as a baseline and whether/how they are applied in SL mode 1 and mode 2 operation

At the last meeting, RAN1 #110, the discussions regarding multi-channel access reached a second version of Proposal 5 (cleaned up) [4]:

Proposal 5 (II): *Multi-channel access*

- *Both DL Type A and Type B multiple channel access procedures from NR-U are to be used as the baseline for SL-U*
    - *FFS their applicable transmission scenarios and any necessary enhancement/restrictions and update for SL-U operation*

This subsection discusses Type A and Type B downlink multiple channel access procedures in NR-U.

3GPP TS 37.213 supports two downlink multiple channel access procedures: Type A and Type B. Each of these is divided to two categories: Type A1, Type A2 and Type B1, Type B2.

<u>Type A multiple channel access procedure (downlink)</u>. In this procedure, Type 1 channel access procedure is carried out on each channel at the gNB. The specific procedure for selecting and decrementing the backoff counter values is different in Type A1 and A2.

Figure 1 shows this procedure when the gNB is using five channels, where Channel #5 is separated in frequency sufficiently apart so that the RF power leakage at its receiver due to transmissions in Channel #1 or Channel #2 can be neglected. On the other hand, there is a significant level of RF power leakage from Channel #1 to Channel #2, and vice versa. As shown here, backoff counter values associated with Channels #1 and #2 are frozen when there are transmissions in either channel. On the other hand, these transmissions do not have an effect on the backoff counter value associated with Channel #5. Note that if there are simultaneous transmissions on multiple channels, except in rare occasions, the start times of such transmissions do not coincide.

- Type A1. Procedure for the backoff counter adjustment is as follows:
  - Backoff counter value determined independently for each channel
  - When transmission on any channel ends
    - the gNB can resume decrementing the backoff counter on any other channel either after determining the channel is idle for 36 us or after reinitializing the backoff counter. (This applies to the Resume Backoff block in Figure 1.)
- Type A2. Procedure for the backoff counter adjustment is as follows:
  - All channels use the same initial backoff counter value, which is determined by the channel with the largest contention window
  - When a transmission on any channel ends
    - the backoff counters for all channels are reinitialized. (This applies to Resume Backoff block in Figure 1.)

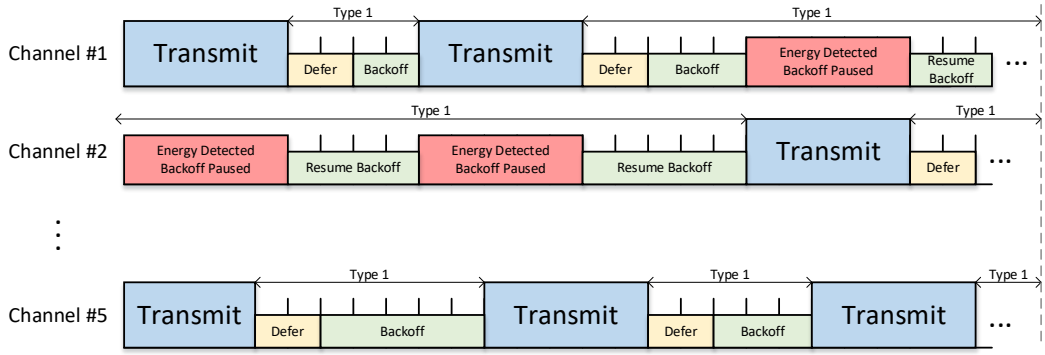

Figure 1. Type A multiple channel access procedure.

Type B multiple channel access procedure (downlink). In this procedure, Type 1 channel access procedure is carried out on one of the channels and other channels are sensed for at least 25 us before selecting them for transmission. The channel used with the Type 1 procedure is constrained such that it is either selected randomly or the same channel should not be selected more than once every second. Type B1 and B2 procedures use different methods for the contention window.

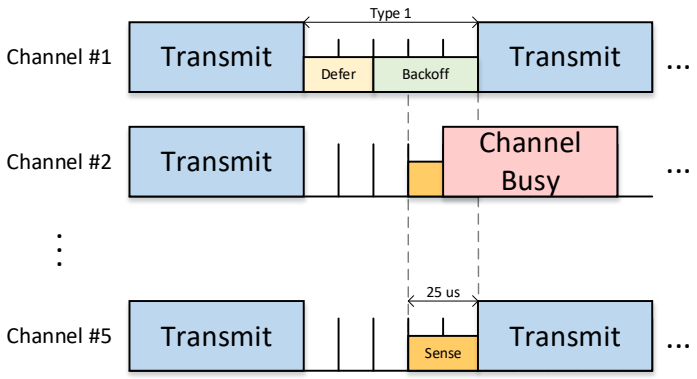

Figure 2. Type B multiple channel access procedure.

Figure 2 shows the Type B channel access procedure for a five-channel system where Channel #2 is sensed busy in the time window shown. Type 1 channel access procedure is used in Channel #1 and Channel #5 is sensed to be idle in the 25 us interval prior to the end of this procedure. As shown here, in Type B procedure transmissions in multiple channels start at the same time.

- Type B1. A single contention window is maintained for all the channels and this is used in the Type 1 procedure of the selected channel.

- Type B2. Each channel maintains an independent contention window. The largest contention window of any channel is used to determine the initial backoff counter value of the channel used for Type 1 procedure.

Proposal 1: Study multiple channel support for SL-U using the NR-U downlink channel access procedure as the baseline.

Proposal 2: Support multiple channel support for SL-U under semi-static channel access conditions.

Proposal 3: Study supporting mode 2 sidelink in both contiguous and non-contiguous multiple channels, where the starting times of the non-contiguous channels may not be time aligned.

- **Study supporting mode 2 sidelink operations in multiple channels where Type B procedure could choose non-contiguous multiple channels that are not sufficiently separated apart in frequency such that sensing in one channel may not be possible while transmitting in the other channel.**

2.2 Semi-Static Channel Access

In RAN1 #109-e, the support for FBE-based semi-static channel access procedure was discussed for the first time. There was significant preference to support this feature so it was discussed further in RAN1 #110 where the FL proposal reached its second version [4]:

Proposal 2-3 (II):

- *FBE-based semi-static channel access for SL-U is supported*
    - *Channel access procedures based on semi-static channel occupancy are intended for environments where the absence of other technologies is guaranteed e.g., by level of regulations, private premises policies, etc.*
    - *NR-U channel access procedures for semi-static channel occupancy are to be taken as the baseline / starting point.*
        - *FFS any necessary updates or enhancement for SL-U operation*

This feature would be useful in a number of areas [5] such as V2X, basement areas, tunnels, underground infrastructure, etc. and work should continue on this topic.

Proposal 4: FBE-based semi-static channel access for SL-U is supported

- **Channel access procedures based on semi-static channel occupancy are intended for environments where the absence of other technologies is guaranteed e.g., by level of regulations, private premises policies, etc.**
- **NR-U channel access procedures for semi-static channel occupancy are to be taken as the baseline / starting point.**
    - **FFS any necessary updates or enhancement for SL-U operation**

2.3 UE-to-UE COT Sharing

The relevant agreement reached at the TSG RAN WG1 #110 Meeting [2]:

Agreement

- For UE-to-UE COT sharing, continue considering the following alternatives:

- Alt. 1: A responding SL UE can utilize a COT shared by a COT initiating UE when the responding SL UE is a target receiver of the at least COT initiating UE's PSSCH data transmission in the COT.
    - When the responding UE uses the shared COT for its transmission has an equal or smaller CAPC value than the CAPC value indicated in a shared COT information
    - FFS any additional conditions
- Alt. 2: A responding SL UE can utilize a COT shared by a COT initiating UE when the responding SL UE is a target receiver of the COT initiating UE's transmission in the COT.
    - When the responding UE uses the shared COT for its transmission has an equal or smaller CAPC value than the CAPC value indicated in a shared COT information
    - FFS how to determine a SL UE is a target receiverFFS: details of the channel type of the COT initiating UE's transmission
    - FFS any additional conditions
- For Alt1 and Alt2: When a responding UE uses a shared COT for its transmission(s), the COT initiating UE is a target receiver of the responding UE's transmission(s).
    - FFS: details of the channel type of the responding UE's transmission(s)

- gNB relaying/forwarding a UE initiated COT to another UE is not supported in Rel-18
- FFS whether a Mode 1 UE can report a COT or related information to gNB for aiding Mode 1 RA

The sidelink mode 2 semi-persistent scheduling (SPS) scheme is based on periodic resource reservations where this periodicity, indicated by the Resource Reservation Interval (RRI), is included in the Transport Block (TB) as part of the 1st stage of the Sidelink Control Information (SCI). The UEs avoid transmission collisions by decoding this SCI and determining each other's RRI values, and using them to predict the resources reserved by the other UEs. In the absence of LBT blocks, the SPS scheme autonomously assigns resources to the UEs in such a manner that the sidelink network operates in an efficient manner. However, the LBT blocks impose significant challenges when using the SPS scheme and some of these challenges are discussed here. Also, this subsection presents a preliminary framework for supporting the COT sharing mechanism among multiple UEs that is consistent with the agreement listed above.

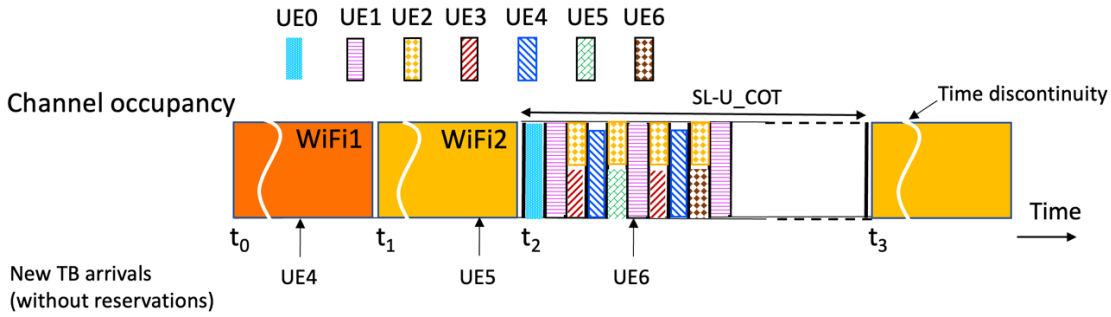

Figure 3. Illustrative scenario of a sidelink UE network contending for channel access with two WiFi networks.

Figure 3 shows an illustrative scenario where a network of sidelink UEs are contending for channel access with two WiFi networks. This figure shows the sidelink UEs transmitting in a burst, once one of the UEs (UE0) gains access to the channel. In this illustrative scenario, at time t_2 UE0 gains access to the channel, and transmissions from UE1, UE2 and UE3 follow their resource reservation order that existed prior to the LBT block. This figure also shows new TB arrivals from UE4, UE5 and UE6 that do not have prior resource reservations. The sidelink UEs transmit for a maximum burst duration of SL-U_COT as shown here and contend for the channel again. This illustrative scenario is not supported by R16/R17 sidelink mode 2 so enhancements have to made to this resource allocation scheme to support such a burst transmission scheme from the sidelink UEs. Note that such a burst transmission scheme is necessary to achieve a realistic data rate from the sidelink network.

The illustrative burst transmission scheme for the sidelink UEs shown in Figure 3 is consistent with the UE-to-UE COT sharing agreement listed above. Specifically, UE0 initiates a COT share by sending the transmission resources for the UEs in the network that already had reservations. In this figure, at the time slot at time t_2, UE0 sends data to UE1, UE2 and UE3 that indicate their transmission resources. Next, using this information, UE1, UE2 and UE3 transmit in their assigned resources with UE0 being one of the target receivers of such transmissions. Because UE0 is assuming a centralized resource allocation role in this scenario, it could use the received information from the other UEs to de-conflict the already allocated resources or to allocate new resources. This approach can be used to share the COT only with those UEs that already had prior resource reservations. In this figure, UE4, UE5 and UE6 have to contend for channel access using the LBT mechanism.

Observation 1: Sidelink mode 2 resource allocations are designed to support different UE transmissions in adjacent time slots. Because of this, in the absence of COT sharing among multiple UEs, the data rate realized from the sidelink UE network will be significantly degraded when contending for channel access with NR-U systems.

Proposal 5: To achieve the objective of enhanced data rates from the sidelink, support mechanisms for COT sharing from one UE to multiple UEs.

Proposal 6: Support Alt. 2 as adoption of Alt. 1 may result in lower data rates from the SL-U network at higher latencies.

2.4 Mode 2 Resource Allocations

The following channel access and resource allocation challenges have to be addressed to support the sidelink in the unlicensed bands.

- Resources that are already reserved during and after an LBT block. The SPS scheme is used by the UEs to reserve resources periodically. For effective use of the SPS scheme, it is necessary to preserve the order of resources reserved even after an LBT block.
- Starting sidelink UE transmissions after an LBT block. Sidelink network consists of many UEs so each of them could use the Type 2 procedure to access the channel.
    - Multiple sidelink UEs may gain access to the channel at the same time slot resulting in collisions and failure to gain channel access.
    - The UE that gains access to the channel first may not be the next-in-line UE in terms of resources reserved prior to the LBT block.
- Sensing and selection windows of the SPS scheme. The SPS scheme maintains a sensing window that is either 1100 ms or 100 ms long. These window sizes do not account for the LBT blocks. Similarly, the selection window does not account for the LBT blocks.
- New TB arrivals during LBT blocks. A high number of TBs may attempt to access the channel when the sidelink UEs gain access to the channel after an LBT block. This may result in collisions as the SPS may select overlapping resources for these TBs.
- Absence of reservations in some time slots in a sidelink COT. Because sidelink mode 2 uses a conservative resource reservation scheme to avoid potential transmission collisions, when the sidelink UEs gain access to the channel some of the time slots may not contain transmissions. This may result in a shorter COT as a result of another radio network accessing the channel.

Proposal 7: Support enhancing sidelink mode 2 resource selection procedure to account for LBT blocks. Study supporting the following in the enhanced version

- **Resources that are already reserved during and after LBT blocks**
- **Starting UE transmissions after an LBT block**
- **Sensing and selection window sizes**
- **New TB arrivals during LBT blocks**
- **Absence of sidelink reservations in some time slots.**

3. Summary of Proposals

Proposal 1: Study multiple channel support for SL-U using the NR-U downlink channel access procedure as the baseline.

Proposal 2: Support multiple channel support for SL-U under semi-static channel access conditions.

Proposal 3: Study supporting mode 2 sidelink in both contiguous and non-contiguous multiple channels, where the starting times of the non-contiguous channels may not be time aligned.

- **Study supporting mode 2 sidelink operations in multiple channels where Type B procedure could choose non-contiguous multiple channels that are not sufficiently separated apart in frequency such that sensing in one channel may not be possible while transmitting in the other channel.**

Proposal 4: FBE-based semi-static channel access for SL-U is supported

- **Channel access procedures based on semi-static channel occupancy are intended for environments where the absence of other technologies is guaranteed e.g., by level of regulations, private premises policies, etc.**
- **NR-U channel access procedures for semi-static channel occupancy are to be taken as the baseline / starting point.**
    - **FFS any necessary updates or enhancement for SL-U operation**

Proposal 5: To achieve the objective of enhanced data rates from the sidelink, support mechanisms for COT sharing from one UE to multiple UEs.

Proposal 6: Support Alt. 2 as adoption of Alt. 1 may result in lower data rates from the SL-U network at higher latencies.

Proposal 7: Support enhancing sidelink mode 2 resource selection procedure to account for LBT blocks. Study supporting the following in the enhanced version

- **Resources that are already reserved during and after LBT blocks**
- **Starting UE transmissions after an LBT block**
- **Sensing and selection window sizes**
- **New TB arrivals during LBT blocks**
- **Absence of sidelink reservations in some time slots.**

4. References

[1] 3GPP RP-221938: "NR sidelink evolution".

[2] OPPO, "Status Report to TSG," RP-221937, 3GPP TSG RAN meeting #97-e. Electronic Meeting. September 12-16, 2022.

[3] OPPO, "Status Report to TSG," RP-221064, 3GPP TSG RAN meeting #96. Budapest, Hungary. June 06-09, 2022.

[4] OPPO, "FL summary for AI 9.4.1.1: SL-U channel access mechanism (EOM)," R1-2207793, 3GPP TSG RAN WG#1 110. Toulouse, France. August 22 – 26, 2022.

[5] 3GPP TR 22.839: "Study on Vehicle-Mounted Relays."