3GPP TSG RAN Rel-18 workshop
Electric Meeting, June 28 – July 2, 2021

RWS-210291

FUJITSU
shaping tomorrow with you

Study on AI for Air Interface Enhancement in Rel-18

FUJITSU LIMITED

Copyright 2021 FUJITSU LIMITED

Motivation

FUJITSU

- **AI is recognized as a promising tool to meet the emerging/stringent requirement from 5G applications and 5G verticals.**
  - From 5G to 5G-Advanced era, more KPI combinations (throughput, latency, reliability, etc.) are defined to reflect the emerging requirement from new 5G applications/verticals.
  - It is challenging to optimize system performance to meet those KPI combinations by simply reusing conventional methods.
  - Recently, it has been recognized by 3GPP WGs (e.g., RAN3, SA2 and SA5) that AI is a promising tool for handling the complex optimizations.
- **AI is also promising to cope with the problems in air interface, including coverage problem in high frequency bands.**
  - Wider range of radio bands and new application scenarios result in coverage problem to NR systems, and the problem becomes more critical due to the increasing 5G deployment in FR2.
  - As the first release of 5G-Advanced, further study on applying AI to air interface will bring a new methodology to cope the coverage problems.
- **AI can be as the iconic tech to push the business of 5G-Advanced.**

Note: AI = AI/ML in this material

Copyright 2021 FUJITSU LIMITED

A new area in AI for RAN

FUJITSU

AI for RAN in Rel-18

- Enhancement for Data Collection for NR and EN-DC: RAN3-lead, from SI to WI
- Enhancement for Air Interface: as a new SI in Rel-18, led by RAN1

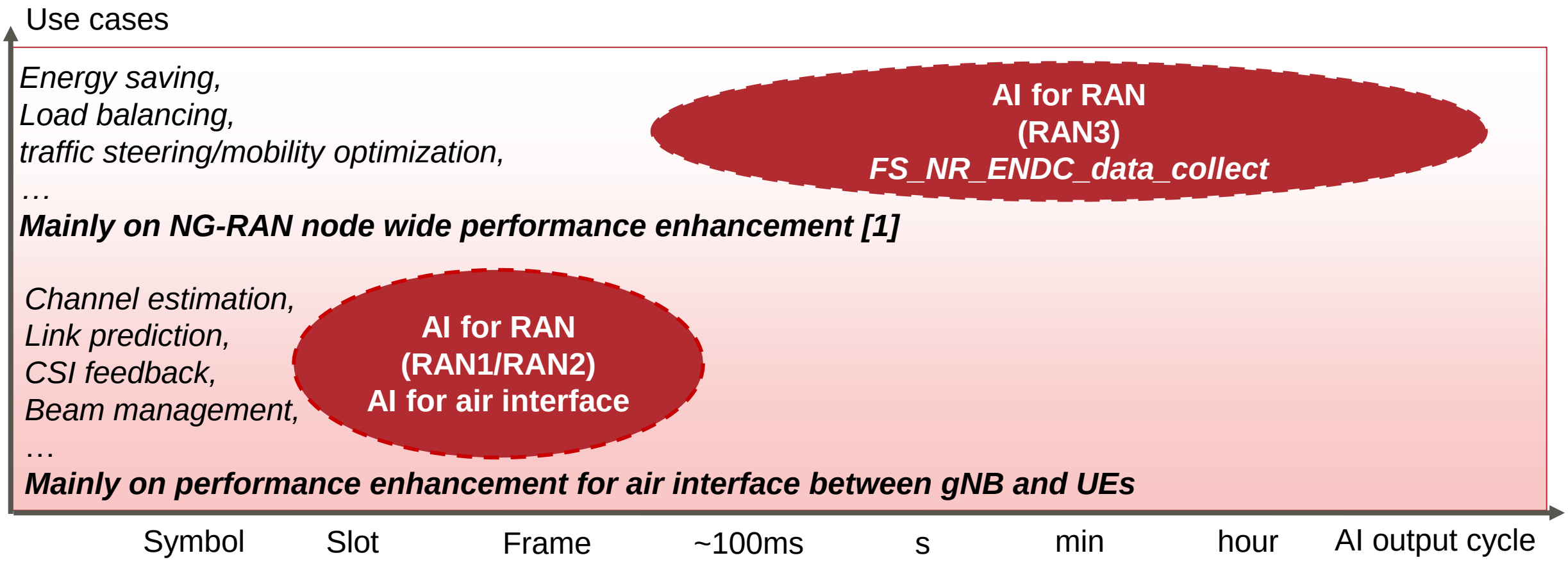

Copyright 2021 FUJITSU LIMITED

General view on AI for air interface

- **AI can enhance air interface performance by:**
  - **Better learning radio channels variation in frequency/time/spatial domain.**
  - **Better utilizing historic data on scheduling, measurements, feedbacks etc..**
  - **Providing better solutions to coverage enhancement with constraints to complex metrics.**

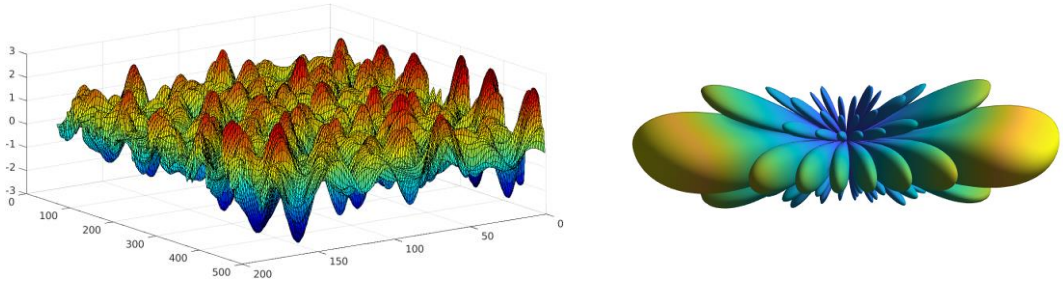

Frequency Time Spatial

- **AI in PHY layer and MAC layer can provide real time level control.**
  - **Tackle the fast changes in radio environment.**
  - **Be able to support AI output cycle in TTI level.**

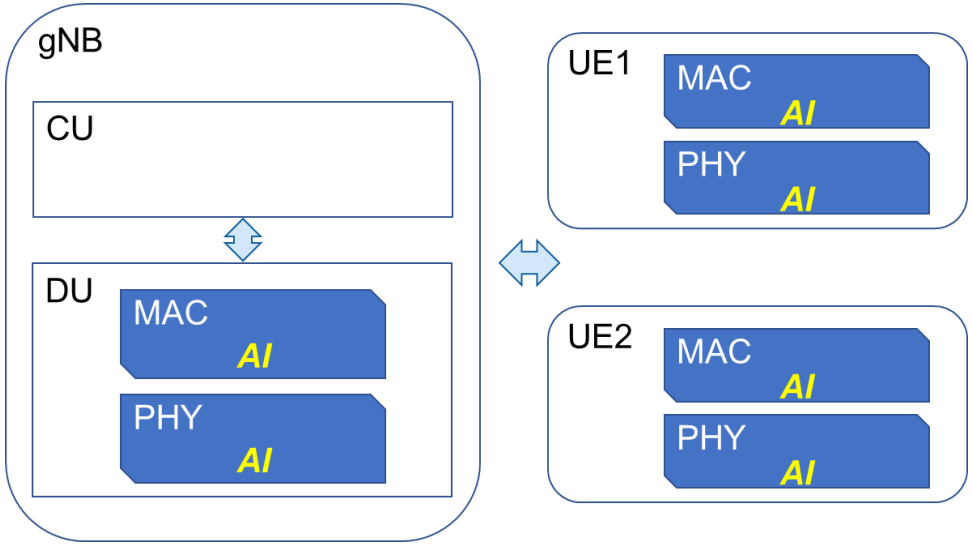

Copyright 2021 FUJITSU LIMITED

Potential use cases

FUJITSU

- **Channel estimation**
  - To reduce RS overhead or estimate channel with high precision,
  - Utilize AI's capability in information recovery.
- **Link prediction**
  - To overcome/alleviate outdated PMI/CQI/RI feedback in high mobility scenarios,
  - Utilize AI's capability in time series prediction.
- **CSI feedback**
  - To reduce feedback overhead in massive MIMO cases,
  - Utilize AI's feature extraction capability to compress channel state information.
- **Beam management**
  - To have zero beam failure coverage,
  - Utilize AI's capabilities for decision making in uncertain and high-dimensional spaces.

Copyright 2021 FUJITSU LIMITED

Proposals

- AI for Air Interface Enhancement is suggested to be set up as a study item in Rel-18, and led by RAN1.
- As a new topic in Rel-18, the study focus can be:
  - To have a common understanding among companies on AI terminology, functionalities, framework, and data set.
  - To identify the typical use cases and clarify the real time request case by case.
  - To study the evaluation methodology with aligned assumptions on AI/ML models and evaluate the gains from AI in the identified use cases.
    - The life cycle of AI model and whether/how to update AI model should be studied.
    - Potential STD impacts should be clarified and studied.
- High level principles defined in “FS_NR_ENDC_data_collect” of RAN3 should be taken as a reference, and the scopes of these two study items should be clarified when necessary.

Copyright 2021 FUJITSU LIMITED

Reference

- RP-201620, Study on enhancement for data collection for NR and ENDC.
- S2-2009241, SA2 R17 WID on Enablers for Network Automation for 5G – phase 2.
- S5-212369, SA5 R17 WID on Enhancements of Management Data Analytics Service.
- TR37.817, Study on enhancement for Data Collection for NR and EN-DC.

Copyright 2021 FUJITSU LIMITED

FUJITSU

shaping tomorrow with you