3GPP TSG RAN Rel-18 workshop RWS-210167

Electronic Meeting, June 28 – July 2, 2021

Further URLLC/IIOT enhancements in Rel-18

Source: vivo

Document for: Discussion & Decision

Agenda Item: 4.2

Background

- Basic URLLC/IIOT functions for NR was supported in Rel-15 and enhanced in Rel-16/Rel-17 with following specified transmission schemes:

	Rel-15	Rel-16	Rel-17
PHY Layer	Slot-based time domain repetitions with semi-statically configured repetition factor for PDSCH, PUSCH (repetition Type A), PUCCH	• Time domain repetitions with dynamically indicated repetition factor for slot-based PUSCH (repetition Type A) and sub-slot based PUSCH (repetition Type B) • Spatial domain multi-TRP transmission for PDSCH	• Time-domain sub-slot based PUCCH repetitions • Spatial domain multi-TRP transmission for PDCCH/PUSCH/PUCCH • PUCCH carrier switching
Higher Layer	Freq. domain: basic PDCP duplication function, e.g. 2 legs	Freq. domain: enhanced PDCP duplication function, e.g. 4 legs with dynamic act./de-act.	N/A

- Observations：
  - Redundant transmission schemes with soft combining gain on one CC were specified in PHY Layer
    - Over time ➔ Better reliability ☺; Medium latency 😐
    - Over space ➔ Better reliability ☺; Better/Medium latency depends on the multi-TRP schemes (TDM/FDM/CDM)
  - Redundant transmission scheme without soft combining gain on multiple CCs was specified in higher layer
    - Over frequency ➔ Medium reliability 😐; Better latency ☺
  - Transmission switched from one CC to another CC is to be specified in PHY Layer only for PUCCH
    - ➔ Inflexible/inefficient for the overall URLLC performance, data channels are more important and should benefit from the carrier switching.

Enhancements for carrier switching

- For PDSCH/PUSCH retransmission due to NACK/DTX, deliver the data via another carrier

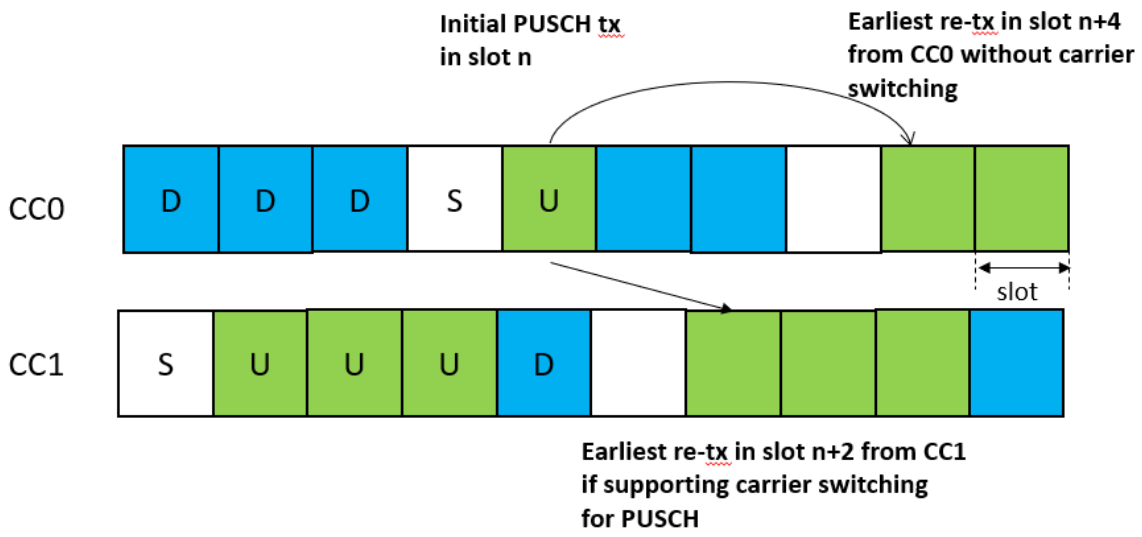

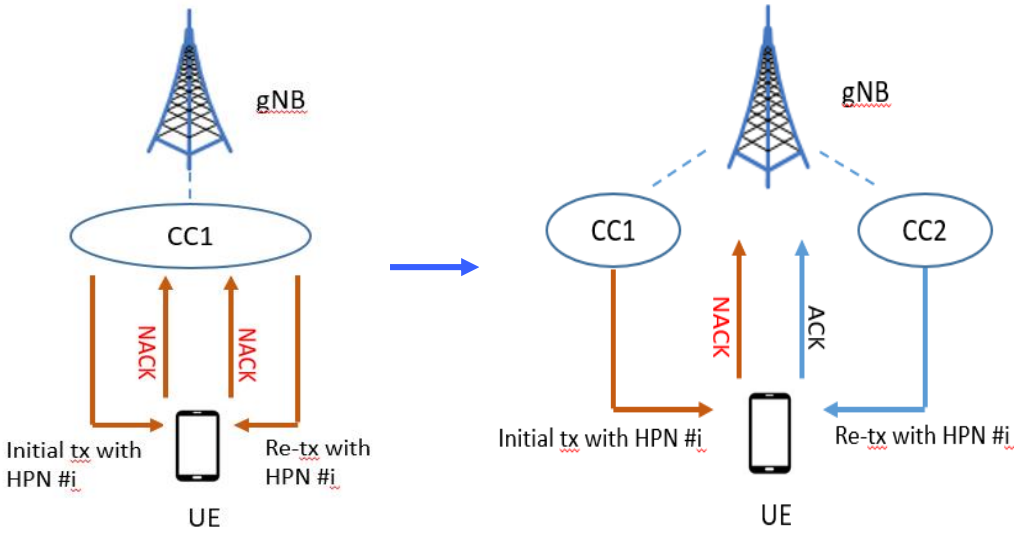

- Benefits:
  - The transmission latency can be reduced greatly.
  - Resoruce utilizaiton efficiency can be improved by using the CC with better channel quaility for the retransmission.
  - Load balancing among CCs can be achieved.

➔ ***Proposal: Specify PDSCH/PUSCH initial transmissions and re-transmissions on different CCs in Rel-18 URLLC WI.***

Enhancements for repetitions over multiple CCs

- Repetitions over multiple Carriers
  - PDSCH/PUSCH(/PUCCH) repetitions for a single TB with soft combining gain over multiple CCs
    - Potential benefits: Better reliability and better latency.
- Receive repetitions until ACK is sent
  - For PDSCH repetitions, UE receives repetitions until ACK is sent to adjust repetition factor based on the need
    - Potential benefits: Improve spectrum efficiency and save power.

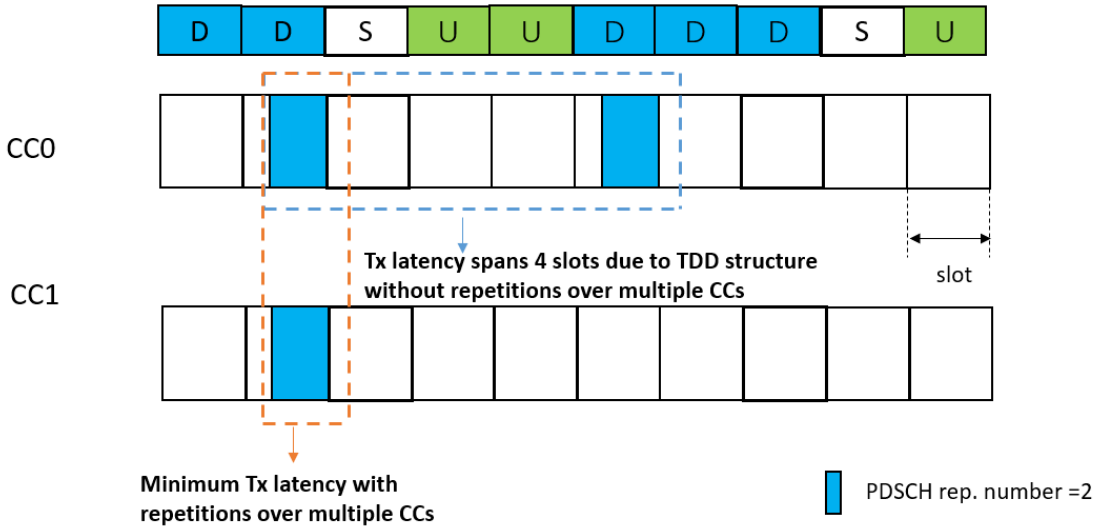

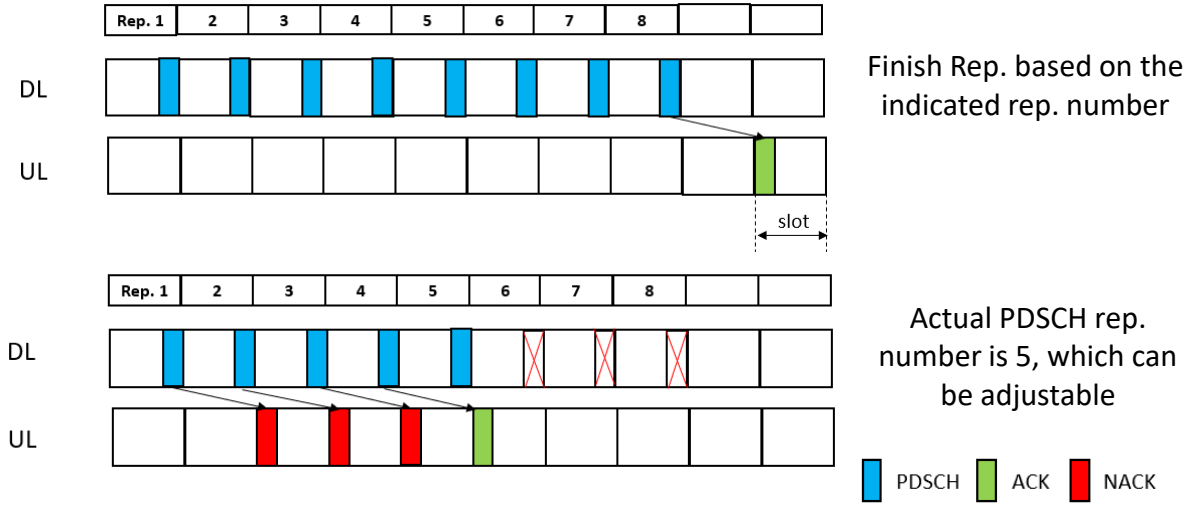

➔ ***Proposal: Study and if agreed, specify PDSCH/PUSCH/PUCCH repetitions over multiple CCs.***

➔ ***Proposal: Study and if agreed, specify early termination for PDSCH repetitions.***

Summary

- **Potential Objectives for Rel-18 URLLC/IIOT enhancements**
  - Specify PDSCH/PUSCH initial transmissions and re-transmissions on different CCs.[RAN1, RAN2]
  - Study and if agreed, specify PDSCH/PUSCH/PUCCH repetitions over multiple CCs.[RAN1, RAN2]
  - Study and if agreed, specify early termination for PDSCH repetitions.[RAN1]

THANK YOU.
谢谢。