3GPP TSG RAN Meeting #99
Rotterdam, Netherlands, March 20-23, 2023

RP-230364

Views on Ambient IoT

TDoc Type: Discussion
For: Decision
Agenda item: 9.2.3
Source: Fujitsu Limited

© 2022 Fujitsu Limited

Overview

- Our views on the following topics are provided in this contribution:
  - Proposal 4-3a in section 5.3.5 (on in-band, guard-band, standalone band)
  - Proposal 4-5, in section 5.5.5 (Spectrum)

© 2022 Fujitsu Limited

on in-band, guard-band, standalone band

FUJITSU

- Proposal 4-3a: Agree that the study considers Ambient IoT deployment in-band to NR, in guard-band of NR, and standalone band from NR, and FFS: relationship to deployment scenarios.
  - 1. Note: Prioritization among them can be discussed in later meetings.

○ Deployment flexibility is very important for the market expansion. Meanwhile, it will increase the development cost (and delay the market introduction)
  - ○ Development of 3 different solutions may cause market fragmentation
  - ○ This is the lesson we learned from NR Rel-15

○ According to the experience in NB-IoT, the functional differentiation among 3 scenarios were necessary because of the coexistence with LTE(e.g. necessity of LTE CRS avoidance). However, there was no strong necessity for differentiation in NR.

Observation 1: Inclusion of different deployment scenarios in study phase should not justify the introduction of a different functionality for each scenario for the simple implementation

© 2022 Fujitsu Limited

on in-band, guard-band, standalone band

FUJITSU

○ **Further analysis on 3 operation modes from BS/Intermediate node point of view:**

Inband

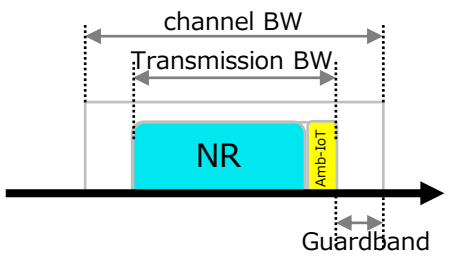

- Useful from RF viewpoint.
- Non-negligible impact to the scheduler to coexist with eMBB services

Guardband

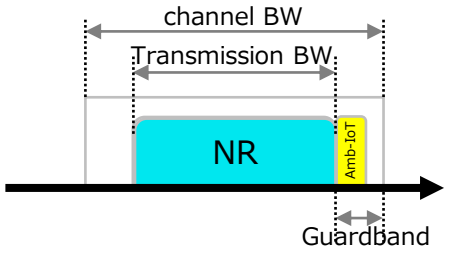

- RF characteristics satisfy the regulatory requirements.
- Good coexistence with eMBB services

Standalone

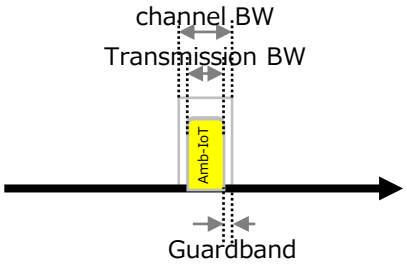

- Simple and straightforward.
- Spectrum availability need to be clarified

Observation 2:

- **To offer Amb-IoT services,**
  - **Inband operation may require non-negligible software impact**
  - **Guardband operation may require non-negligible hardware update**
  - **Support of standalone operation depends on the spectrum availability**

© 2022 Fujitsu Limited

on in-band, guard-band, standalone band

FUJITSU

- **Further analysis on 3 operation modes with topology assumption**
  - **Topology (1): BS <-> Ambient IoT device**

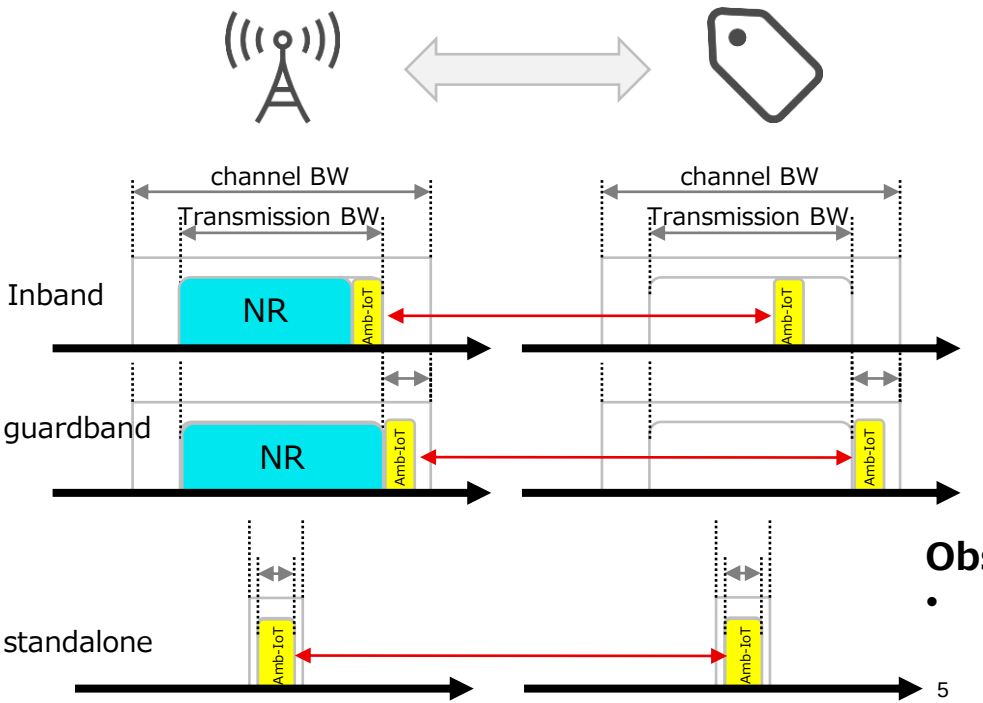

We believe Topology (1) is one of the most important topologies for Amb-IoT, even though more study is necessary on e.g.:

- Inband and Guardband scenario is useful when the existing BSs are reused. Thus, the same coverage as NR shall be achieved by Amb-IoT.
- Guardband scenario is useful when the same RF(filter) can be reused. Thus, the validity of this scenario depends on the bandwidth of Amb-IoT.
- The benefit of standalone for topology (1) is not clear yet (e.g. use of licensed spectrum)

Meanwhile, we currently see no necessity to introduce specific L1/L2 functionality for each deployment scenario

Observation 3:

- **No need for different L1/L2 functionality for 3 deployment scenarios for topology (1)**

© 2022 Fujitsu Limited

on in-band, guard-band, standalone band

FUJITSU

- **Further analysis on 3 operation modes with topology assumption**
  - **Topology (2): BS <-> Intermediate node <-> Ambient IoT device**

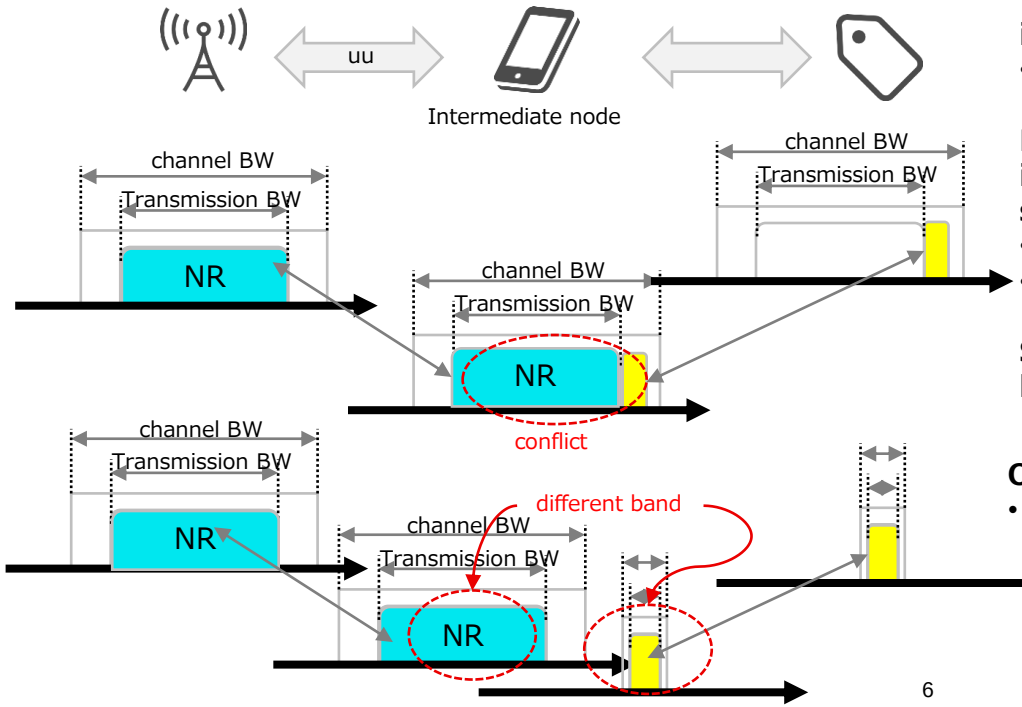

We believe Topology (2) is also one of the most important topologies for Amb-IoT

- to cover the coverage hole by Topology (1)

However, a concern is that there will be conflict at an intermediate node for inband/guardband operation – similar issue as IAB

- NR(backhaul link) Rx and Amb-IoT (access link) Tx
- NR(backhaul link) Tx and Amb-IoT (access link) Rx

Such an issue can be avoided by using 2 different band, which allows simultaneous Tx/Rx

Observation 3:

- **Additional functionality may be necessary for inband and guardband operation for topology (2)**
  - **The discussion on how to use the spectrum at an intermediate node needs careful discussion**

© 2022 Fujitsu Limited

Spectrum

FUJITSU

- Proposal 4-5 for agreement: Spectrum in a deployment scenario is: licensed FDD, licensed TDD, unlicensed.
  - Note: Further discuss if the study should apply any limitations to the cases for which unlicensed spectrum is studied.

- **What is the benefit and drawback of ambient IoT with unlicensed spectrum?**
  - Benefit
    - No license fee
    - Nomadic deployment of gNB/intermediate node
    - Global harmonization of spectrum (e.g. 2.4GHz ISM band)
  - Drawback
    - Interference
    - Limitation of UL Tx power (depending on regulation)
    - potential introduction of coexistence functionalities, e.g. carrier sense (depending on spectrum)

- **What is the benefit of 3GPP Ambient IoT (compared with non-3GPP technology with unlicensed spectrum) ?**
  - Wide coverage as an operator service
  - Stable service quality by operators' deployment

→ It is questioned if 3GPP Ambient IoT with unlicensed spectrum can still be competitive?

Observation 4: no clear benefit of Ambient IoT with unlicensed spectrum is foreseen

© 2022 Fujitsu Limited

Proposals

The following proposals can be made based on the observations:

- **on in-band, guard-band, standalone band**
  - In-band, guard-band and standalone band scenarios can be kept in this study.
  - However, introduction of scenarios which requires additional complicated functionalities should be carefully considered.
    - e.g. Inband and guardband operation at an intermediate node
- **Spectrum**
  - Unlicensed spectrum should be deprioritized
    - No benefit over non-3GPP technologies is foreseen

© 2022 Fujitsu Limited

Thank you

© 2022 Fujitsu Limited