3GPP TSG RAN Meeting #99

Rotterdam, Netherlands

March 20-23, 2023

RP-230301

Qualcomm

Views on Ambient IoT

Qualcomm

Content

- Use case categorization
- Terminology
- Connectivity Topology
- Deployment Scenarios
- Energy Storage
- Design Target
- Functionality

Use Case Categorization & Mapping to Device Types

- SA1 has outcome of 30 use cases and 3 traffic scenarios.
- RAN#98e agreed the two grouping methods
  - Grouping A: indoor, outdoor, indoor/outdoor
  - Grouping B: Inventory, Sensors, Positioning, Command
- In RAN#98e, 3 device types were agreed for discussion.
  - We use following color coding : blue, green, red for Device A, B, C, respectively.

Device A
Device B
Device C

- In this section, we categorized the use cases according to the grouping method in matrix form and provide the mapping from grouped categorized use case to device types which are suitable to support the use case group.

Use Case Categorization & Mapping to Device Types

Device environment	Inventory	Positioning	Sensors	Command
Indoor	1. Automated warehousing (A) 5. Automobile manufacturing (A) 16. automated supply distribution (A) 23. Smart pig farm (A) T1. Flower auction (A) T3. Electronic Shelf Label (A)	1. Automated warehousing (A) 5. Automobile manufacturing (A) 14. Indoor positioning in shopping center (A) 21. Museum Guide (A)	6. Smart home (CB) 13. Base station machine room (CB) 15. Smart laundry machine (BA) 17. Device Activation and Deactivation 18. Fresh Food Supply Chain (BA) 20. Smart agriculture (CB) 23. Smart pig farm (CB) T2. Cow stable (BA)	
Outdoor		10. Ranging for Ambient IoT (AB)	3. Smart grid (C) 19. Forest fire monitoring (C) 22. smart grazing dairy farming (C) 24. smart manhole cover safety monitoring (C) 25. Smart bridge health monitoring (C)	30. controller in smart agriculture (C)
Indoor/ outdoor	2. Medical instrument inventory (AB) 4. Ambient IoT in Non-Public Network (AB) 7. airport terminal / shipping port (BC) 27. End-to-end logistics (AB)	2. Medical instrument (A) 8. Finding Remote Lost Item (C) 9. LCS for Ambient IoT (C) 12. personal belongings finding (CA) 16. Automated supply distribution (A)		11. Medical instrument maintenance(A/C) 26. Elderly Health Care (C) 28. Pressure powered switch (C)
Note that some use cases appear more than once.				

Device A
Device B
Device C

Observation 4: Outdoor requires larger range → C/B

Observation 1: For inventory, speed and low cost could be important factors → A

Observation 2: Positioning is in many case, required functionality for inventory use case; → A. But, it is also popular use case as independent use case in outdoor → C/B.

Observation 3: Sensors typically requires higher power consumption, which requires EH; → C/B

Terminology

Proposal: Define following terminology for discussion purpose.

- **device**: Ambient IoT device
- **Ua interface**: interface between BS and A-IoT device
- **Forward Link (FL):** wireless link from BS to A-IoT device
- **Backward Link (BL):** wireless link from A-IoT device to BS
- **Ua-FL**: forward link in Ua interface
- **Ua-BL**: backward link in Ua interface
- **Carrier wave**: signal to energize Ambient IoT device

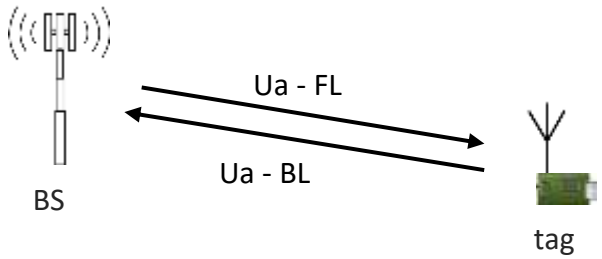

Topology (1): BS <-> Ambient IoT device
NOTE 1: Includes the possibility of BS Rx and BS Tx in different BSs

	(1a): BS ←→ Ambient IoT device	(1b) BS1 ←→ Ambient IoT device ←→ BS2

Observations	• A new interface "Ua" is used to connect BS to device.
	• Carrier wave can be transmitted from BS to device.
	  • Device could be any of device A/B/C.
	  • The carrier wave is used to energize device A/B.
	• Tx in Ua-BL is backscattered for device A/B.
	• Tx in Ua-BL is autonomously generated for device C.
	• UE plays no role.	

Pro	P1: simplest topology	P1: (HW impact) BSs may **not** require full duplex capability to support device A/B. P2: (Coverage) It could have robust coverage if multiple BSs are listening Ua-BL link.
Con	C1: (HW impact) This requires gNB to support limited full duplex capability to support device A/B.	C1: BS1 and BS2 need to support different link direction. Does BS2 require full duplex (FDM rx and tx)? C2: This configuration can generate inter-BS cross link interference. C3: (RAN) This require inter BS coordination; BS1 tx while BS2 rx. Topology (1b) is suitable for standalone deployment.

Topology (2): BS <-> intermediate node <-> Ambient IoT device
NOTE 1: Intermediate node can be relay, IAB, UE, repeater, etc. which is capable of ambient IoT

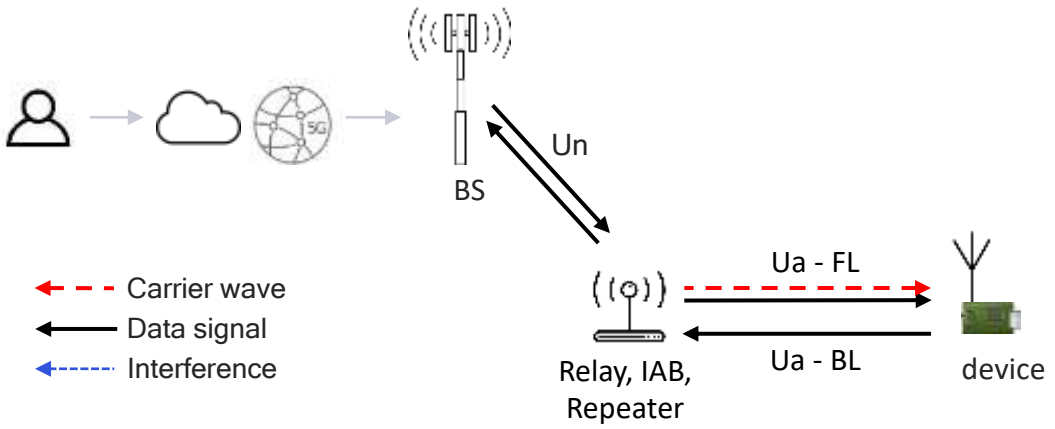

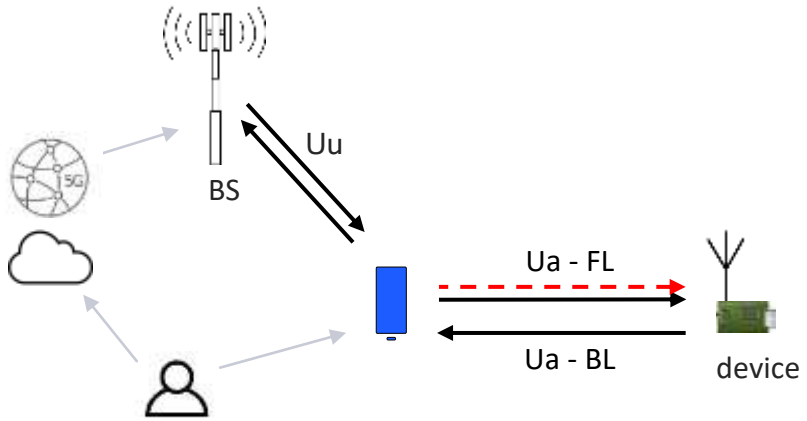

	(2a) BS ←→ Relay ←→ Ambient IoT device	(2b) BS ←→ IAB ←→ Ambient IoT device	(2c) BS ←→ Repeater ←→ Ambient IoT device	(2d) BS ←→ UE ←→ Ambient IoT device
Observations	From device point of view, (2a,2b,2c) may be similar to (1a) BS ←→ Ambient IoT device.			Important topology for **consumer use cases**
Pro	P1: (Coverage) Can provide larger coverage w/ fixed nodes – planned indoor deployment.			P2: (Coverage) Can provide coverage around UE (which is mobile). P3: (HW impact) No impact on BS HW.
Con	C1: (HW impact) Relay/IAB/Repeater needs *limited full duplex capability* – canceling out CW for BL reception to support Ua-BL.			C1: (HW impact) UE requires *limited full duplex capability* – canceling out CW for BL reception – to support Ua-BL. C2: For Ua link, NR UL slots could be used. Using NR DL slots could introduce unnecessary interference to other UEs.

Topology (3): BS <-> assisting node <-> Ambient IoT device <-> BS

NOTE 1: Assisting node can be relay, IAB, UE, repeater, etc. which is capable of ambient IoT

FFS: If the two BS can be different

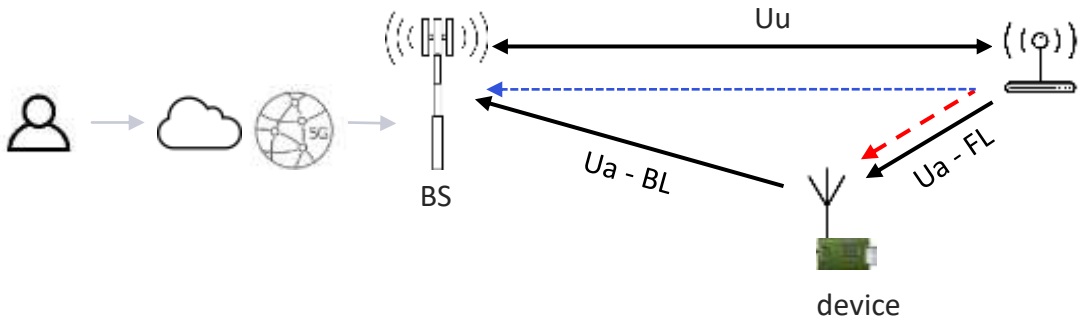

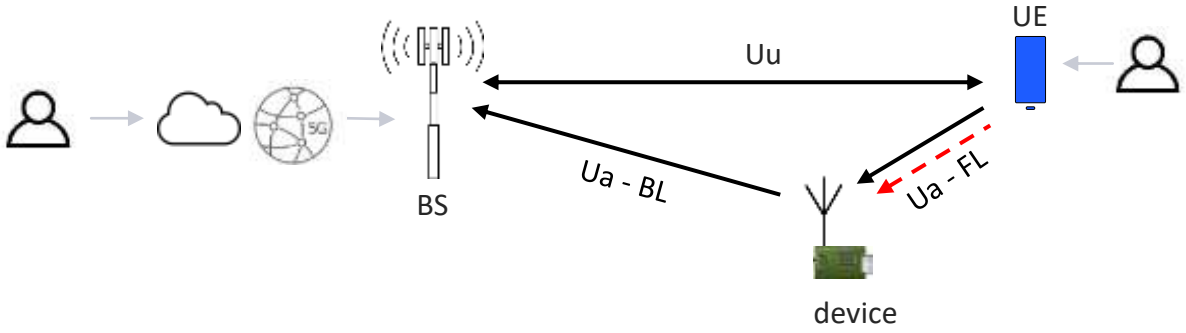

	(3a) BS <-> relay <-> Ambient IoT device <-> BS	(3b) BS <-> IAB <-> Ambient IoT device <-> BS	(3c) BS <-> repeater <-> Ambient IoT device <-> BS	(3d) BS <-> UE <-> Ambient IoT device <-> BS
Observations	This assisting node is used to extend link budget (e.g., Ua-FL). This topology capture **bi-static scenario**, Ua-BL receiver is different from Ua-FL transmitter. Does reverse direction (i.e., Ua-BL to Ua-FL and Uu-FL to Uu-BL) need to be considered?			
Pro	P1: (HW impact) No full duplex capability is required for both BS and UE in (3). P2: (Coverage) Longer range could be achieved by Ua-BL. (3a,3b,3c) could achieve longer range than (3d).			
Con	C1: (RAN) For FFS, having two different BSs requires inter-BS coordination, which make things a bit complicated.			

Topology (4): UE <-> Ambient IoT device

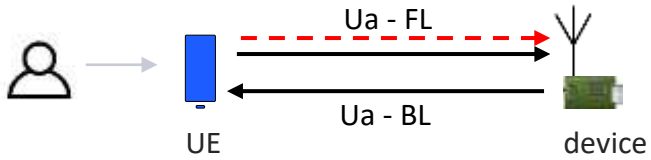

	(4): UE <-> Ambient IoT device
Observations	The direct UE to device case can be covered topology (2d) which requires the involvement of BS. This topology (w/o BS involvement) should be understood as unlicensed band operation where UE does not require connection to Uu link. Similar scenario as that of non-3GPP technologies.
Pro	P1: (Frequency) Due to absence of BS involvement, it could be understood as unlicensed band operation. P2: (5G functionality) Possibility of leveraging some of the 5G functionalities.
Con	C1: (Coverage) Lower tx power limit in unlicensed band giving shorter coverage compared to licensed band operation.

FFS: Topology (5) UE <-> Ambient IoT device <-> {BS or UE}

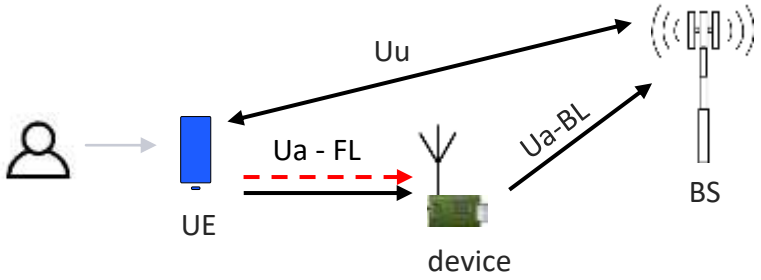

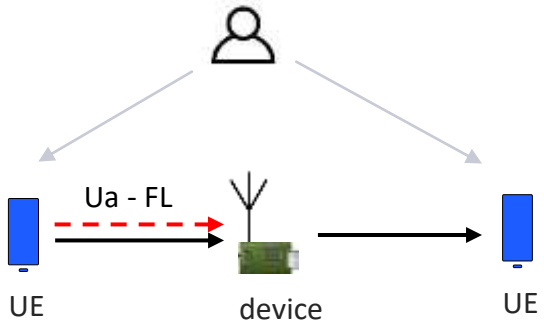

	(5a): UE <-> Ambient IoT device ←→ BS	(5b): UE <-> Ambient IoT device ←→ UE
Observations	This is bistatic topology which requires involvement of BS. So, there must be Uu link between UE and BS. This is already covered by (3d). **Proposal**: remove this topology (5a).	Without BS involvement, this should be understood as unlicensed band operation. **Proposal**: remove this topology (5b).
Pro		
Con		C1: User should carry two Ues and control both. This is a setup not easy to use.

Proposal: Remove topology 5.

Deployment Scenarios

Indoor

Applicable representative use case	Characteristics	Description	Observation
Indoor use case 1, T3, 5, 21 18, 20	Environment (of device)	Indoor only	
	Base station characteristics (if any)	Pico/micro-cell base station	
	Connectivity topology	Topology 1a, 2, 3, 4	Three topology # are in order of preference.
	Spectrum	FFS TDD/FDD In-band, licensed, unlicensed	
	Coexistence with existing 3GPP technology	New sites	Indoor deployment for e.g., warehouse like use case could be new installation.
	Traffic assumption	Mobile terminated	
	Device characteristics	A > B	Device A could be more useful for indoor use case which requires low cost, and fast reading. In indoor, base station/relay could be rather densely deployed.

Deployment Scenarios

Outdoor

Applicable representative use case	Characteristics	Description	Note
Outdoor use case 10, 3, 25 30	Environment (of device)	Outdoor only	
	Base station characteristics (if any)	Macro/Micro-base station	
	Connectivity topology	Topology 1a, 2, 3, 4	Three topology # are in order of preference. 2d is am important topology for consumer use cases.
	Spectrum	FFS TDD/FDD In-band, licensed, unlicensed	
	Coexistence with existing 3GPP technology	Existing sites	Reuse existing outdoor macro/micro base station deployment
	Traffic assumption	Mobile originated	For sensor use case, mobile originated traffic could be dominant type of traffic.
	Device characteristics	C > B, A	Device C will have benefit in terms of range compared to A, and B.

Deployment Scenarios

Indoor/Outdoor

Applicable representative use case	Characteristics	Description	Note
Indoor or outdoor 4, 7, 27 8, 12	Environment (of device)	Indoor/Outdoor	
	Base station characteristics (if any)	Micro-base station (outdoor) Pico-base station (indoor)	
	Connectivity topology	Topology 2, 1a, 3, 4	Three topology # are in order of preference. If device is moving indoor to outdoor or vice versa, then, topology 2d could be useful.
	Spectrum	FFS TDD/FDD In-band, licensed, unlicensed	
	Coexistence with existing 3GPP technology	New sites for indoor Existing sites for outdoor	
	Traffic assumption	Mobile terminated	
	Device characteristics	A=B=C	All device types are equally popular.

Energy storage

Model Assumptions

- Consider simple harvest-Operate model (→)
- Energy is harvested until the capacitor voltage reaches 1V.
- Device starts operating when fully charged (1V).
- Device operates during On time until voltage reaches 0.7V (approx. half of ES), and then, start recharging.

							Sustabable operation time (msec)			
			Rx power = **-20** dBm (0.01mW)		Rx power = **-30** dBm (0.001mW)		Device Power consumption during On (mW)			
Capacitance (uF)	voltage (V)	Energy (uJ)	EH eff.	Charging time	EH eff.	Charging time	0.01	0.1	0.5	1
0.5	1	0.25	0.2	62.5 ms	0.1	2.5 s	12.5	1.25	0.25	0.125
1	1	0.5	0.2	125 ms	0.1	5 s	25	2.5	0.5	0.25
2	1	1	0.2	250 ms	0.1	10 s	50	5	1	0.5
5	1	2.5	0.2	625 ms	0.1	25 s	125	12.5	2.5	1.25
10	1	5	0.2	1.25 s	0.1	50 s	250	25	5	2.5
100	1	50	0.2	12.5 s	0.1	500 s	2500	250	50	25
				Assuming no leakage		Assuming no leakage				

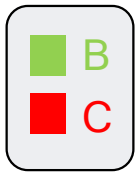

Proposal: Determine energy storage values for E1 and E2 as E1 = [1μJ], E2 = [50μJ].

*Note that Device A has no energy storage. So, it was not considered here.

Summary of KPI Requirements from SA1 use cases

Scenario	Device environment	User-experienced data rate	Message Size	Device density	Communication Range	Service area dimension	Positioning Accuracy
Inventory	Indoor	<100 ~ <1K bps	96 bits ~ <100 bytes	~5M /km2	30-250 m	6K m2 ~ 1.7 km2	2-3 m
	Outdoor						
	Indoor/outdoor	<2 kbps	176 ~ 256 bits	~ 0.1 /m2 (~ 1K /km2)	50-200 m	1 ~ 10 km2	
Positioning	Indoor	<100 ~ <1K bps	96 ~ 128 bits	~ 5M /km2	10~30 m	0.02 ~ 0.6 km2	2~3 m
	Outdoor			0.2M /km2			0.1m
	Indoor/outdoor	<100 ~ <2K bps	176 bits ~ 1K bits	~ 5M /km2	10-200m	200 m2 ~ 0.6M km2	1~3 m
Sensors	Indoor	100 ~ 1K bps	8 ~ 1K bits	~1M /km2	30-250m	10m2 ~ 0.07 km2	
	Outdoor	<0.5 ~ 1K bps	< 100 bytes	~0.01 /m2 (~0.01M /km2)	15~700 m	10 ~ 0.4M km2, citywide	x10 m
	Indoor/outdoor						
Command	Indoor						
	Outdoor	<0.5 Kbps	128 bits ~ 100 bytes	~ 5K /km2	300-500 m	0.43 km2	
	Indoor/outdoor	<1K ~ <2K bps	100 ~ 176 bits	~2M /km2	10-200 m	<250 m2	

RAN Design Targets

Metric	Target	Note
Power Consumption	[hundreds of uW ~ 1 mW]	• Support functionality/capability better than existing non-3GPP tech.
Complexity	[Lower than NB-IoT]	• Energy harvester could support extended range and rather complex operation/computation than non-3GPP tech. • Possibly leveraging some of NR functionalities within device complexity/capability • Lower complexity than NB-IoT
Coverage	[10 ~ 200]m	• Max range reported in SA1 use case is 700m. • Short range for topology 2d or 4 (UE to device). • Longer range is supported by gNB with higher tx power and more capable device type such as C or B.
Data rate	Up to [1]Kbps	• Message size is typical small, e.g., 96bit ~ 1Kbit
Positioning accuracy	[3]m	• Proximity based positioning can address positioning requirement in many of SA1 use cases. Note that this is easily achievable during inventory or discovery process. • Other advanced positioning techniques also need to be supported w/ target accuracy of [3]m.
Device density supported	[1]M/km^2 (=[1]/m^2)	• High device density support is common requirement in many of SA1 use cases (e.g., warehouse, manufacturing)

Functionality

- **Device functionality**
  - To cover outdoor use cases requiring longer range (for device B and C), device is assumed to operate w/ partial/full active RF components.
  - To support topology 1 and 2 for device A, gNB/UE/intermediate node may need to support limited full duplex capability.
  - Device supporting energy harvest and backscattering based communication device has limited sensitivity (e.g., -35dBm ~ -20dBm).
- **Positioning**
  - Proximity based (presence/absence) detection (cell ID, RSSI, etc) to be included in Positioning technique.
  - Other positioning schemes to be further considered considering device complexity.
- **CN Connection**
  - ➔ Needs further study