NOKIA

RP-222430

Motivation for new WID on NR Timing Resiliency and URLLC enhancements in Rel-18

3GPP TSG RAN Meeting #97

Electronic Meeting, 12 – 16 September 2022

Nokia, Nokia Shanghai Bell

© 2022 Nokia

Motivation

- SA2's "Study on 5G Timing Resiliency and TSC & URLLC enhancements" (FS_5TRS_URLLC) is targeted for completion at SA#97 in September
  - The study item outcome is captured in TR 23.700-25
  - Follow-up WI 5TRS_URLLC has been approved by SA2 and is expected to be approved by SA plenary at SA#97

- Release 18 normative work includes several aspects which impact RAN3 & RAN2 specifications:
  - 5GS network timing synchronization status and reporting (Key Issue #1 in TR 23.700-25)
  - Interworking with TSN network deployed in the transport network (Key Issue #5 in TR 23.700-25)
  - Adapting downstream scheduling based on RAN feedback for low latency communication (Key Issue #6 in TR 23.700-25)

- Therefore, a RAN3-lead WID is proposed to specify the corresponding RAN functionality needed to support SA2's work on timing resiliency and URLLC enhancements

© 2022 Nokia

NR Timing resiliency

- Today's 5G networks rely on GNSS, which is either:
  - Integrated at radio sites, or
  - Distributed within the operator's transport network via Precision Time Protocol (PTP) Grandmaster (GM) solutions
- R18 Timing Resiliency improves robustness of time-of-day services provided by 5G in case of GNSS degradation/failure and assists the end user to decide its preferred time source
  - 5GS to be seen as a supplement or alternative to GNSS as a time provider
- Use cases include:
  - 5G public network customers (e.g., smart grid, financial)
  - 5G private network customers (e.g., factory use cases)

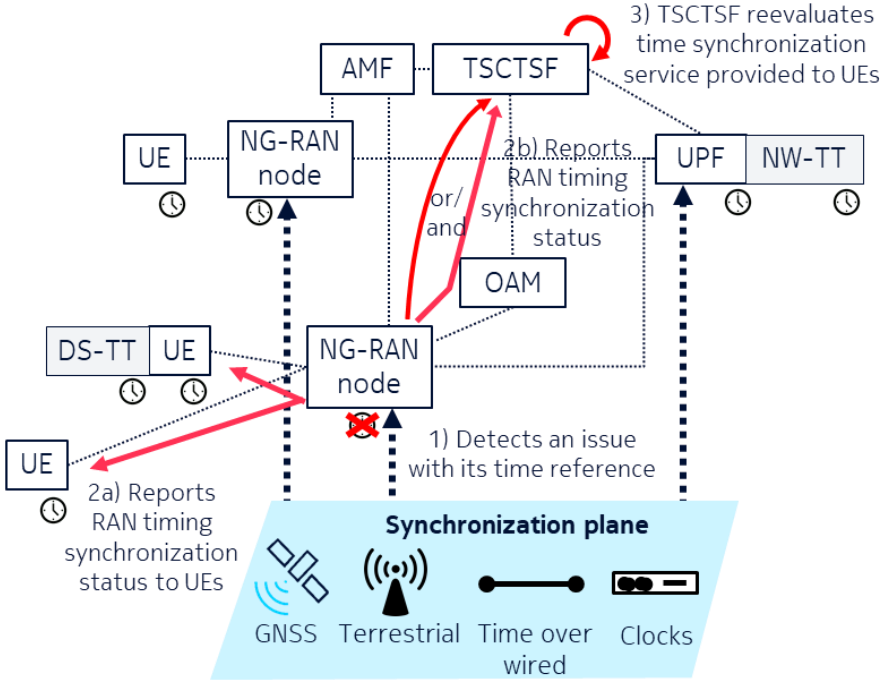

5G timing resiliency system

© 2022 Nokia

Interworking with TSN Transport Network

- TSN network is deployed as the N3 transport network. In this case:
  - UPF (CN-TL) and RAN (AN-TL) are modelled as the talkers and listeners in the N3 transport network.
  - SMF takes the role of CUC.
- SMF collects the relevant parameters from the RAN and UPF, and conveys the talker and listener requirements to the CNC.
- SMF configures the RAN and UPF with parameters provided by CNC so that RAN and UPF can treat the UP traffic appropriately.

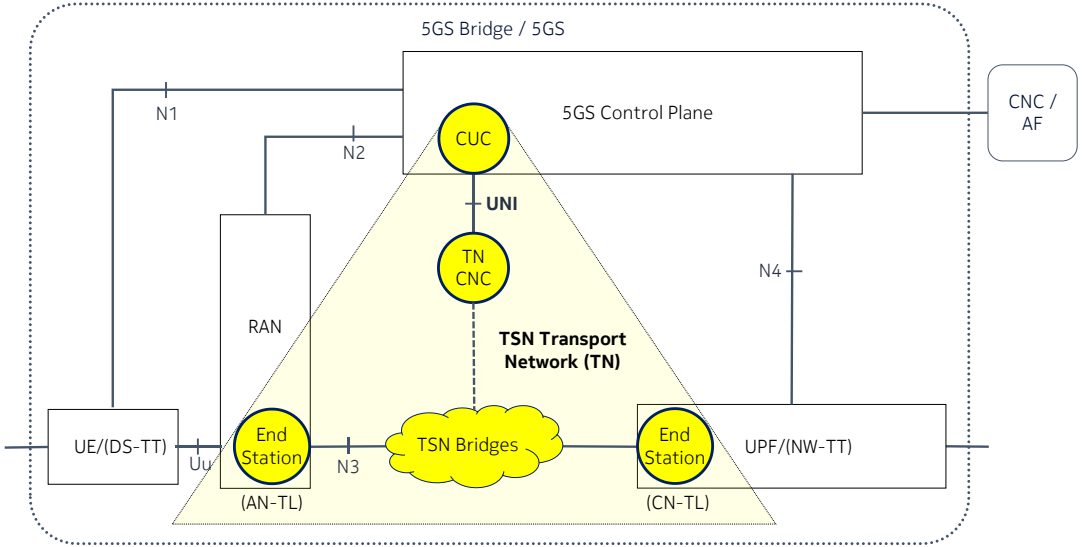

© 2022 Nokia

RAN feedback for application transmission schedule adaption

- Many applications generate periodic traffic streams, which have extremely strict end-to-end latency requirements.
- RAN in many cases introduces a significant part of the end-to-end delay for the traffic streams.
- Packets arriving to the gNB may experience buffering (i.e. resulting in increased delay) due to radio configuration. For example, if their time of arrival is not aligned with the transmission opportunities of the TDD subframe.
- The burst timing feedback from RAN enables applications to align burst transmission schedules with the radio configuration, thus configuration-based buffering delays can be avoided.

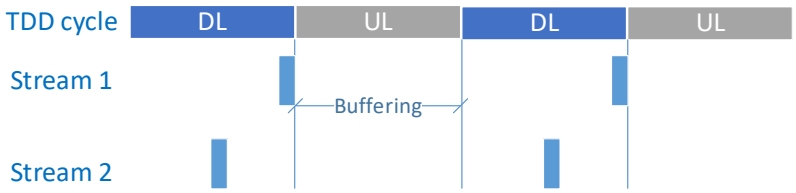

- DL bursts of stream 1 arrive at the end of DL radio transmission opportunities to RAN and must be buffered until the next DL opportunity.
- Stream 2 is aligned with the TDD cycle. Bursts arrive in the middle of the DL opportunities and can be scheduled immediately.

© 2022 Nokia

NOKIA