3GPP TSG RAN Meeting #84
Newport Beach, USA, June 3-6, 2019

RP-190831

Key directions for Release 17

Nokia, Nokia Shanghai Bell

Nokia proprietary

Outline

- Selected highest priority topics:
  - NR-Lite
  - Industrial IoT Enhancements
  - Beyond 52.6 GHz
- Overall Summary of Nokia priorities

© 2019 Nokia

NR-Lite

NR-Lite in Rel-17

- NR-Lite should address new use cases with IoT-type of requirements that cannot be met by eMTC and NB-IoT:
  - Higher data rate & reliability and lower latency than eMTC & NB-IoT
  - Lower cost/complexity and longer battery life than NR eMBB
  - Wider coverage than URLLC
- Requirements and use cases –
  - Data rates up to 100 Mbps to support e.g. live video feed, visual production control, process automation
  - Latency of around [10-30] ms to support e.g. remote drone operation, cooperative farm machinery, time-critical sensing and feedback, remote vehicle operation
  - Module cost comparable to LTE
  - Coverage enhancement of [10-15]dB compared to URLLC
  - Battery life [2-4X] longer than eMBB

- Enable single network to serve all uses in industrial environment
  - URLLC, MBB & positioning

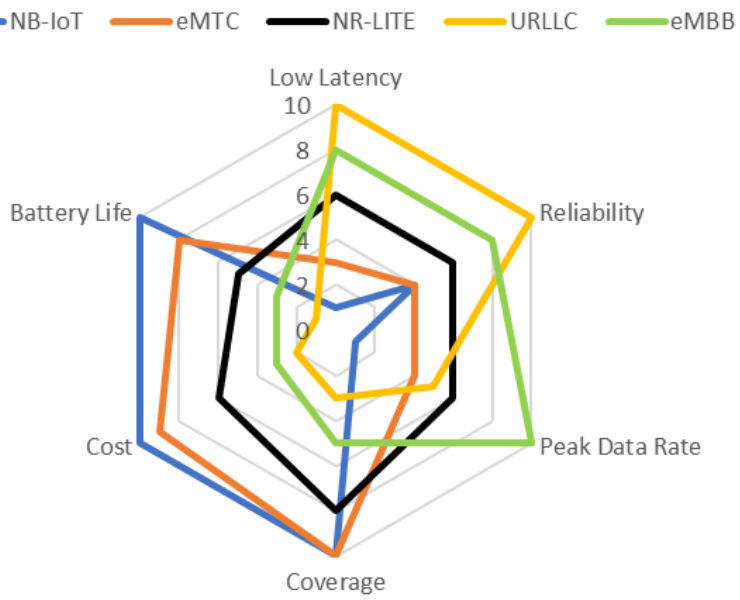

© 2019 Nokia

Industrial Use Cases

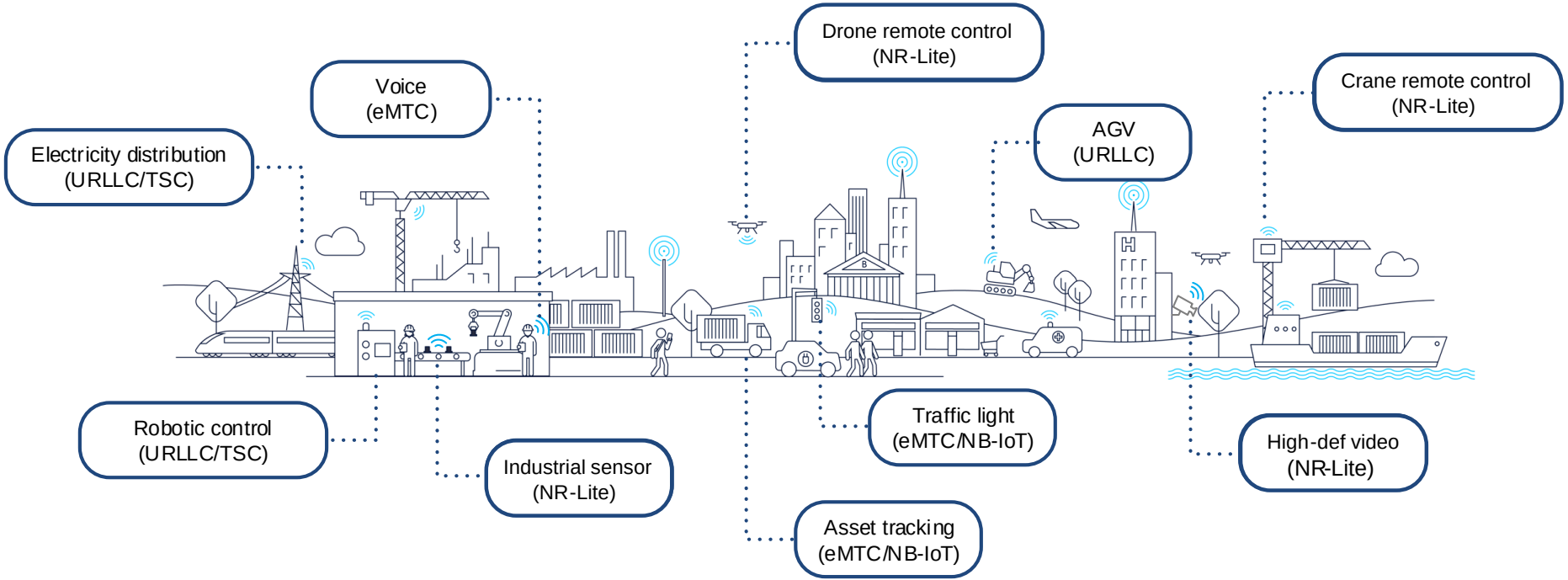

© 2019 Nokia

NR-Lite vs LTE

- Why introduce NR-Lite instead of reusing LTE?
- Motivation
  - No need to support 3 different networks – NR, eMTC/NB-IoT, and LTE
    - Operators can migrate their spectrum to NR which can support both URLLC & NR-Lite on the same carrier as well as deploy eMTC/NB-IoT either in-band or in guard-band.
  - Better system efficiency with NR compared to LTE
    - Utilize NR features like beam-formed operation, higher subcarrier spacing for latency reduction, massive MIMO for coverage, mixed numerology, higher positioning accuracy, low-overhead carriers, etc.
  - Deploy URLLC & NR-Lite in also FR2 and new spectrum
    - FR2 can be very attractive for private networks due to its limited range and high spatial reuse e.g. each building or floor can have its own network and they will not interfere with each other
  - Better integration and benefits from 5G core and architecture – network slicing, service based architecture, flow-based QoS, etc.

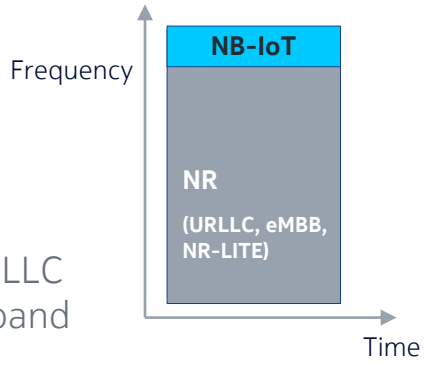

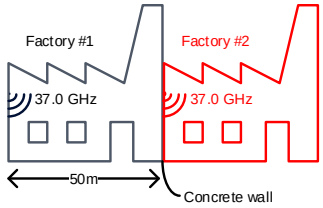

© 2019 Nokia

5G Industrial IoT & Enhanced URLLC

Enhanced Industrial IoT

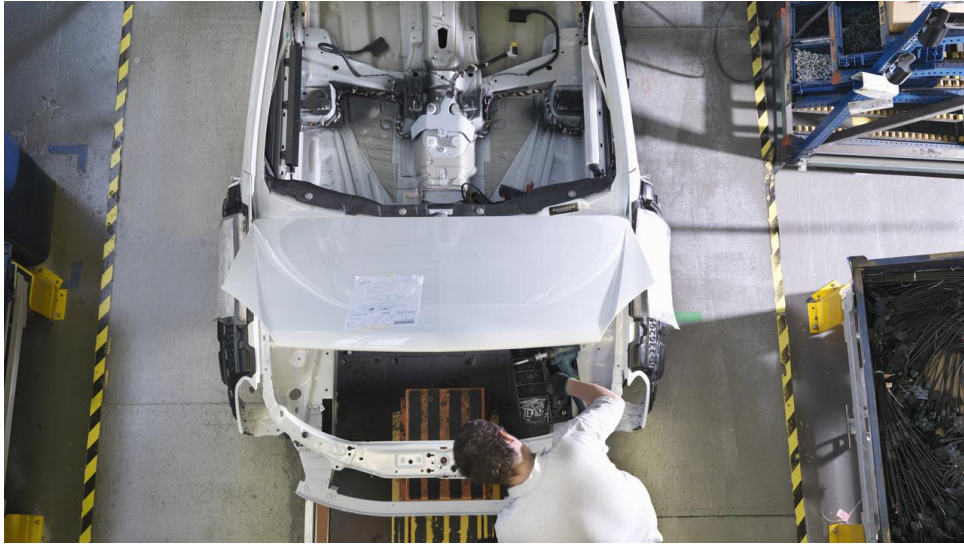

Enable Time Sensitive Communications (TSC) for private WAN

- Further optimized jitter, latency and synch
- Release 16 is limited to TSN scenario only; practical use cases (with wider market use) need more versatile synchronization/timing delivery solution

High performance Industrial IoT

- Higher data rates & traffic densities
- More efficient support of URLLC/TSC and eMBB traffic mix
- QoS predictability, enhanced diversity support (depending on Release 16 outcome)

Release 17 should enable LAN to private WAN (Wide Area Network) for time alignment

© 2019 Nokia

Beyond 52.6 GHz

NR beyond 52.6 GHz
Design requirements and Example Simulations

Design requirements for NR beyond 52.6 GHz

Larger carrier bandwidth - component carriers > 400 MHz

Waveform design – relevant considerations: power efficiency, demodulation complexity and numerology

Enhanced beam management – methods for managing narrower beams and greater number of beams should be studied

Enhanced path diversity – methods for improving path diversity and increasing the probability of LoS paths should be studied

Waveform comparison should be performed using realistic methodology (PAPR too simplistic).

- typical **MPR simulation** (for uplink) in RAN4 shows the **achievable output power** using a given transmit configuration.

Use the same method for both DL and UL transmit power evaluations

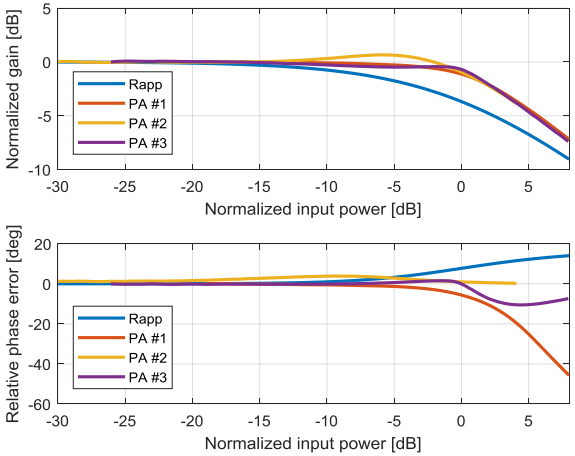

© 2019 Nokia

Summary

Nokia Release 17 RAN priority topics

High Priority
NR-lite
IIoT Enhancements
Beyond 52.6 GHz
MIMO Enhancements
NR-U enhancements
IAB enhancements

Medium Priority
Positioning Enhancements
NTN
NR UAV enhancements
1024 QAM
Multicast
Sidelink enhancements
Multi-SIM
SON enhancements

All items may of course not fit to Release 17!

© 2019 Nokia
NOKIA

NOKIA