ngmn
the engine of broadband wireless innovation

5G Trial and Testing Initiative
Proof of Concept
Major Conclusions

NGMN 5G Trial and Test Initiative

« Proof of Concept »
Major conclusions

Feb. 18th, 2019

All PoC proof points have been tested

	Test cases	
Functional & Architectural Proof Points	Massive MIMO	✓
	CP/UP separation	✓
	CU/DU split	✓
	Slicing	✓
	MEC traffic steering	✓
	Fix Wireless Access (new)	✓
Performance KPIs	UL/DL peak system data rate	✓
	UL/DL average system data rate	✓
	UL/DL peak data rate (single user)	✓
	UL/DL average data rate (single user)	✓
	UL/DL cell edge data rate (single user)	✓

Many thanks to all contributing Partners

Massive MIMO

Test cases and Success Criteria

Rapporteurs:

at&t | 中国移动 China Mobile | NEC

ngmn the engine of broadband wireless innovation

➢ **Outdoor MU Massive MIMO peak and average performance w.r.t. spatial placement for 100 MHz channel size (<6GHz) with 3 test cases:**

- UEs Horizontally distributed (Ant Config:16H x 4V x 2Pol or 12H x 8V x 2)
- UEs vertically and horizontally distributed (Ant Config: 16H x 4V x 2Pol or 12H x 8V x 2)
- UEs horizontally and densely distributed (Ant Config: 8H x 4V x 2Pol)

Below is example configuration for the densely distributed test case, other test cases have different configuration.

AP and UEs allocation in an outdoor environment

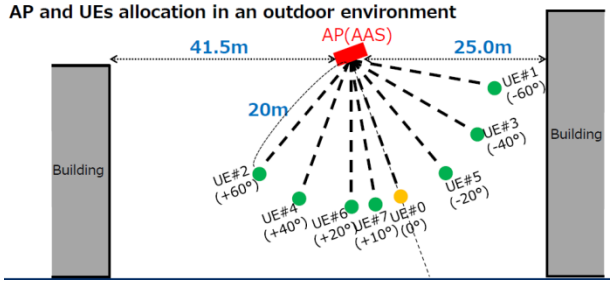

➢ **Outdoor MU Massive MIMO optional performance tests on Coverage and Beamforming capability**

中国移动 China Mobile

➢ **Outdoor Massive MIMO Beamforming Cell Edge Performance Improvement with Inter AP Coordination**

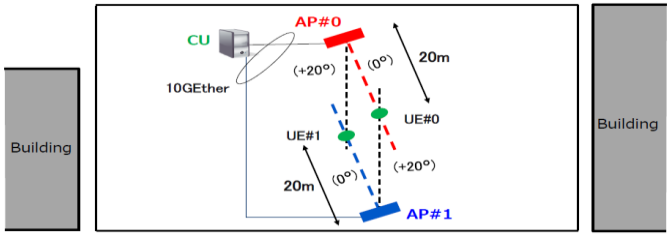

Outdoor Success Criteria

01	eMBB use case; < 6GHz, 100 MHz BW NGMN: 5G should provide 10x improvement on average and peak rate
02	Theoretical peak rate derived from the peak spectral efficiency requirement (ref. to 3GPP – TR 38.913): 3Gbps/1.5Gbps for DL/UL
03	Assess eMBB Throughput against KPIs defined in NGMN & 3GPP.
04	eMBB use case; > 6GHz, 800 MHz BW 5G data rate requirements are in the order of tens of Gbps data rate for DL (> 20 Gbps). ITU ref. 5G peak UL data rate requirement of > 10 Gbps is required.
05	Outdoor Performance criteria maintained at cell edge when AP Coordination

➢ **Indoor MU Massive MIMO System Capacity Test Case for 40 MHz channel (< 6GHz)**

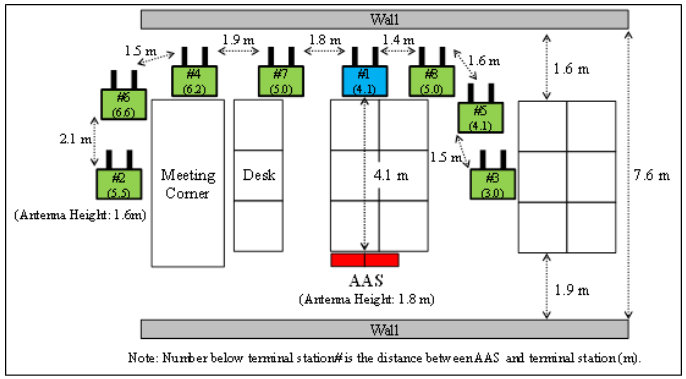

➢ **Indoor mmWave Analog Beam Management capability test case**

-single-Transmission Reception Point (TRP)

-multi-TRP(system config shown below)

at&t

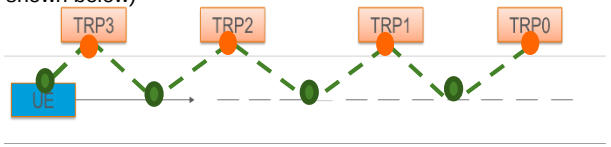

Indoor Success Criteria

01	The total system capacity derived from Shannon's theorem base on DL SINR should be >3.5Gbps
02	The total system data rate for maximum 8 users should be 5 times of single user data rate. (ideally, capacity incrementation should be proportionate to number of users when noise is at null)
03	Performance criteria maintained as UE moves from TRP to another across the horizontal track

Massive MIMO

All Test cases passed target success criteria!

Performance/Functional results

- **Outdoor MU Massive MIMO performance w.r.t. spatial placement for 100 MHz channel size (<6GHz)**
  - Peak Performance (UE horizontally distributed) with 16UEs and 32 streams = 11.027Gbps (DL)
  - Average Performance (UE horizontally distributed) with 12UEs = 4Gbps+ (DL) & 900Mbps (UL)
  - Peak Performance (UE horizontally and vertically distributed) with 12 UEs and 24 streams = 6Gbps+ (DL)
  - Average Performance (UE horizontally and vertically distributed) with 12 users and 24 streams = 4Gbps (DL)
  - Peak performance (UE densely distributed) with 8 users and 16 streams = 5.4Gbps (DL)

- **Outdoor Massive MIMO Beamforming Cell Edge Performance Improvement with Inter AP Coordination (<6GHz)**

2 Layers /UE		UE #0 (Mbps)	UE #1 (Mbps)	Total Throughput
Both UE#0 and UE#1 Active	Without CB*	246.9	274.6	1029.7
	With CB	352.3	351.4	1407.5

note: Coordinated Beamforming (CB)*

- **Optional Outdoor test cases were also carried out, detailed results can be found in tests reports**
  - Coverage extension
  - Beamforming capability : UE separation

Details of test results and their analysis are in the PoC mMIMO report

- **Indoor MU Massive MIMO System Capacity Test Case for 40 MHz channel (< 6GHz)**
  - total system capacity with 8 terminal stations - 3.8Gbps for 2 AAS units case, about 5.4 times the system capacity when one terminal station is served.

- **Indoor mmWave Analog Beam Management capability test case (multi-TRP)**
  - The fluctuations in the throughput are correlated with the intra and inter-TRP beam switching events and indicate that link adaptation was able to quickly recover from changes in signal strength measured at the UE.

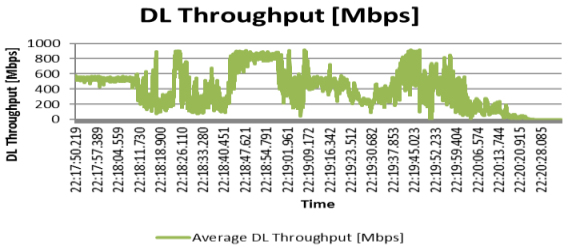

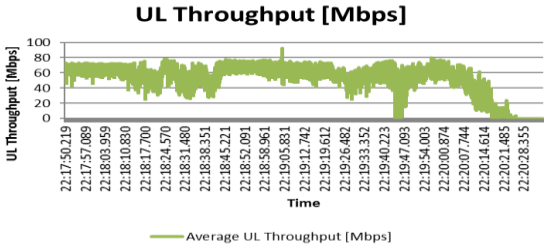

CP/UP separation

Rapporteur:

- Use-case/applications to demonstrate value of CP/UP separation:
  - **Content-aware Real-Time Video streaming optimization**
    - Real-time Selective dropping of video frames under congestion.
  - QoE-based Mobility Management
    - Programmable inter-frequency load balancing across cells.
- Reference Architecture for the PoC – based on xRAN

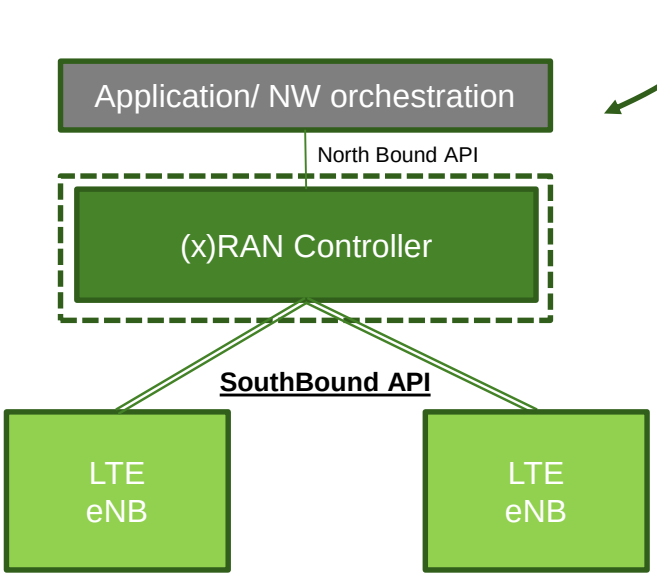

Centralized Unit/Distributed Unit split

Rapporteur: 中国移动 China Mobile

- **Test environment**
  - The reference CU-DU functional split is at the higher layer (i.e. PDCP split).

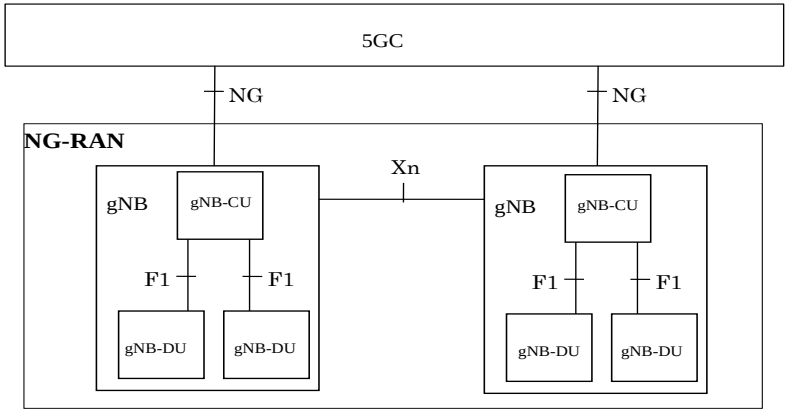

- **Test cases**
  1. CU/DU architecture
     - CU/DU split architecture
       - CU/DU setup and DU addition
       - Basic configuration: 1CU+1DU, 1CU+2DU
       - CU/DU capability test: 1CU+N DU
     - Basic performance test
       - Cell setup and delete
       - UE attach and detach
       - UE data rate
       - Cell Peak rate
  2. Key procedures
     - Handover (Intra-CU inter-DU, Intra-DU)
  3. Scalability and flexible deployment
     - Scale-in and scale-out
     - CU flexible deployment

- **Test results**

Functionality Evaluation	Per-UE peak throughput	HW Resource	VNF Scalability	CU Flexible Deployment	Service Load Balance & Migration	High Availability (Recovery time)
Vendor A	4Gbps 🙂	24 core 🙂	🙂	🙂	🙂	3min 🙂
Vendor B	4Gbps 🙂	20 core 🙂	🙂	🙂	☹	NA ☹
Vendor C	500Mbps ☹	28 core 🙂	🙂	☹	🙂	3min 🙂
Vendor D	4Gbps 🙂	21 core 🙂	🙂	🙂	🙂	3min 🙂

- Due to HW and SW constraints at the time of testing, some functionalities were not supported fully

Single user data rate & latency

Rapporteur: T··

Test environment

The measurement was held in dense-urban environment, in frequency band 3.75 GHz, BW:100 MHz, TDD mode, DL and UL ratio 4:1

Test results

	Test case	Throughput	Extrapolated Spectral efficiency	Criteria	Result	UE configuration
single-user Peak rate	Downlink	2122 Mbps	24.25 bps/Hz	3Gbps	X*	Max 8 layers, 100 MHz
	Uplink	432 Mbps	9.3 bps/Hz	1.5Gbps	X*	Max 4 layers, 100 MHz
single-user Average rate	Downlink	176.25 Mbps	2.36 bps/Hz	330 Mbps	X**	Max 4 layers, 50 MHz
	Uplink	48 Mbps	2.1 bps/Hz	160 Mbps	✓	Max 2 layers, 50 MHz
single-user Cell edge rate	Downlink	80 Mbps	1.08 bps/Hz	22.5 Mbps	✓	Max 4 layers, 50 MHz
	Uplink	8 Mbps	0.35 bps/Hz	4.5 Mbps	✓	Max 2 layers, 50 MHz

*The performance gap is caused by inability to find measurement point with error-free utilization of 8 MIMO layers in downlink and the highest transport block sizes. The uplink performance was limited by worse radio condition and by the fact that the system was not capable of 256 QAM modulation in uplink. Practical achievement of performance target in real environment is seen as very challenging.

** There was a gap in the average downlink rate which was likely caused by measuring with the UE that was capable of using only 4 layers and 50MHz spectrum.

	Min/Average Latency	Criteria	Meet the criteria ?
single-user latency	6/13 ms	<10 ms	✓ / X***

*** The measurement was held in different radio condition, different load and different packet size. Target value of 10ms was reached only for part of the single UE scenarios, however in the loaded system the E2E latency was not meeting criteria (13 ms). Further investigation during pre-commercial trial phase is recommended.

Network Slicing Testing Architecture & Success Criteria (1/2)

Rapporteur: orange

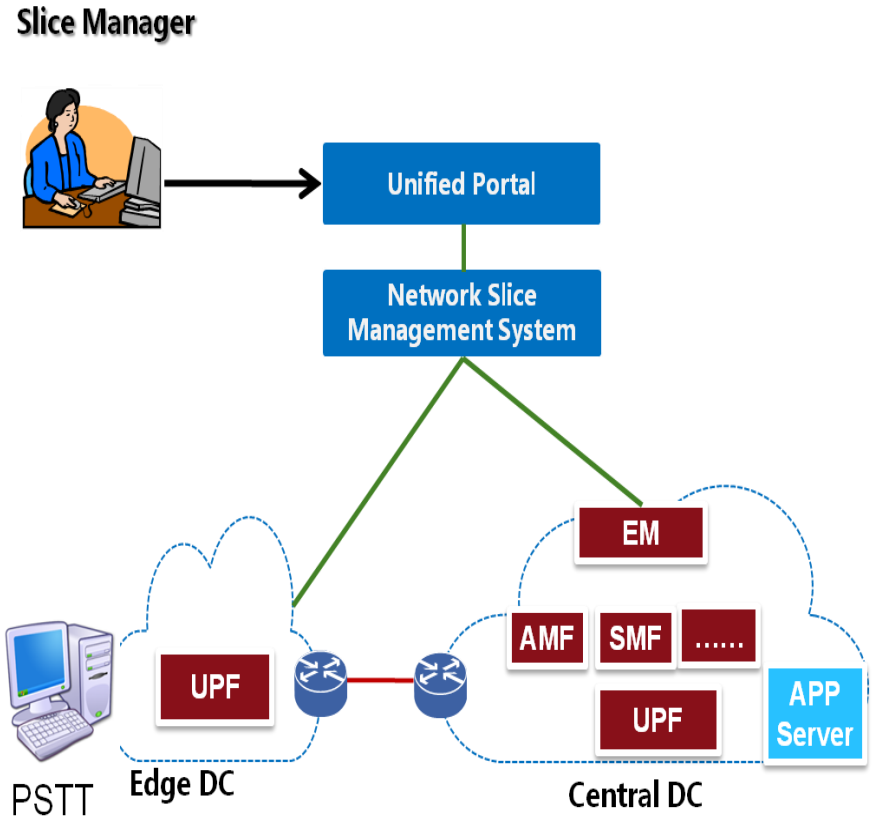

Success Criteria

01 Demonstrate the lifecycle management of 5GC Network Slice Subnet.

02 Tenants / Customers satisfaction (Isolation, Performance, and Security).

03 Reduction of pain points and duration of on-boarding, creation / delivery process.

04 Assess eMBB Network Slice Latency against KPIs defined in NGMN & 3GPP.

05 Assess uRLLC Network Slice Latency against KPIs defined in NGMN & 3GPP.

06 Assess eMBB Network Slice Throughput against KPIs defined in NGMN & 3GPP.

Network Slicing Proof Points (2/2)

Rapporteur: orange

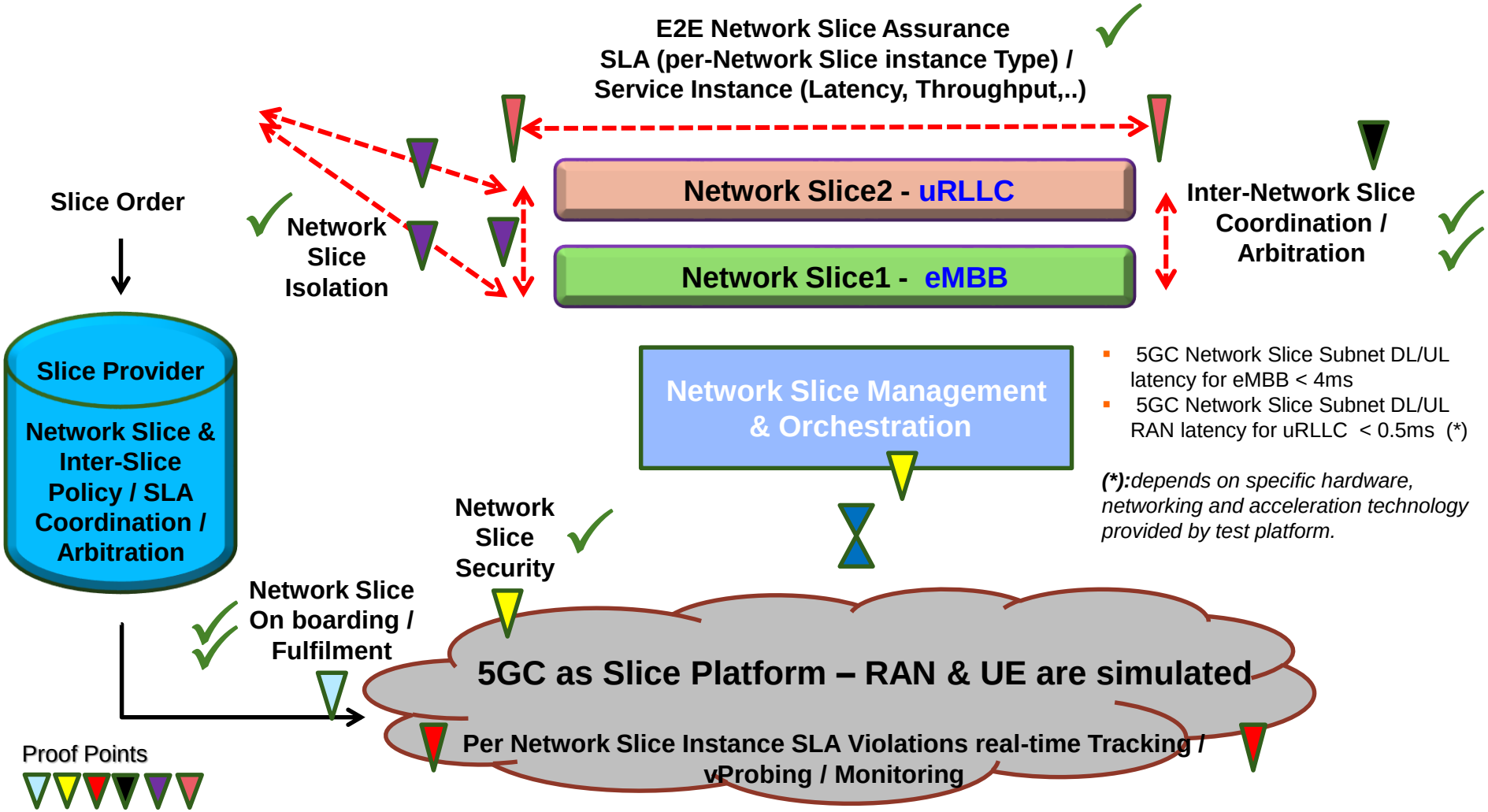

- 5GC Network Slice Subnet DL/UL latency for eMBB < 4ms
- 5GC Network Slice Subnet DL/UL RAN latency for uRLLC < 0.5ms (*)

(*):*depends on specific hardware, networking and acceleration technology provided by test platform.*

Network Slicing for Automotive

Rapporteur: orange

The experimentation was performed on a test track. Core network modules are pre-5G Rel 15 compliant (**CP-UP separation, network slicing**). For reducing End-to-End latency, the Serving Gateway & Packet Gateway have been implemented in local breakout using virtualized network function.

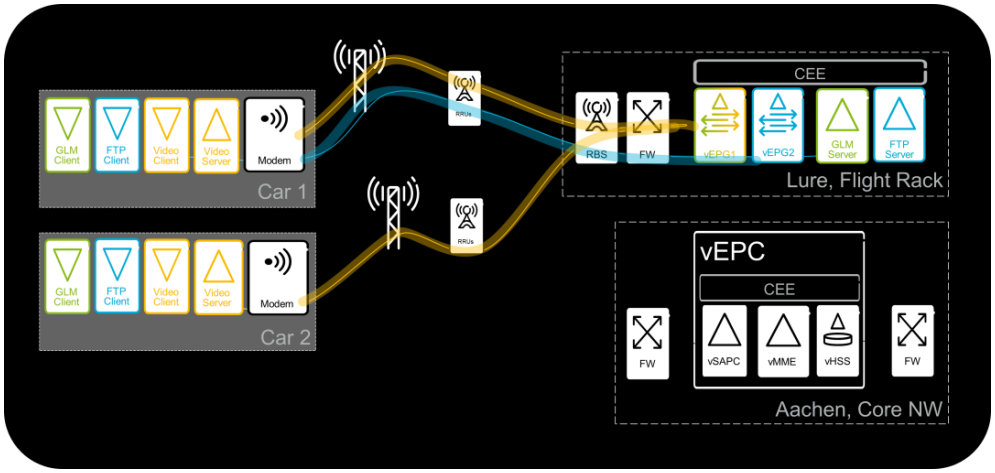

Two network slices associated to 2 virtual Evolved Packet Gateways with different Quality Class Indicators have been set up:

- **Automotive slice** : Ultra-low latency slice for high-priority Intelligent Transport System traffic.
- **Mobile Broadband slice** for background load traffic in uplink and/or downlink

It has been shown that "Vehicle to Network" can efficiently complement "Vehicle to Vehicle".

01 Network Functions Virtualization provides flexibility and enables edge deployment.
02 Split of data and control plane with local breakout reduces the latency.
03 Network slicing brings advanced QoS in the management of the differentiated traffic.

Mobile Edge Cloud Traffic Steering

Rapporteur: 工業技術研究院 Industrial Technology Research Institute

- Although the test configuration is mostly based on 4G solutions, MEC and Cloud Data Center are both ETSI NFV-compliant platforms.

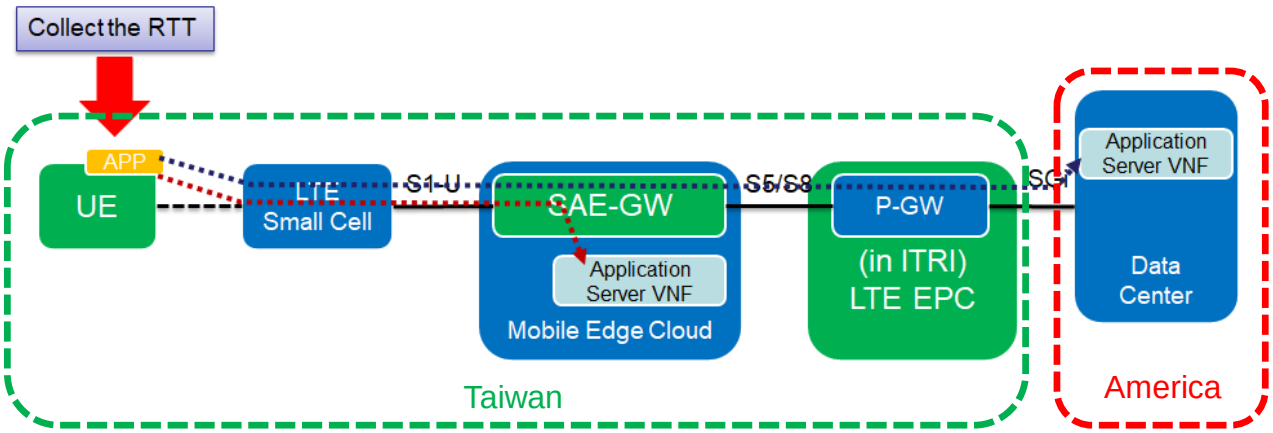

- Thanks to 5G flexible User Plane Function architecture options, MEC could successfully identify and steer specific user plan traffic to the MEC instead of core network. Thus it could support latency sensitive services. ✓
- MEC latency test shows that steering function of MEC is able to reduce end-to-end latency by 90%. ✓

	web service in MEC	web service deployed on the data center
Round Trip Time (Avg.)	36ms	486ms

Fixed Wireless Access Testing Architecture & Success Criteria

Rapporteur: orange

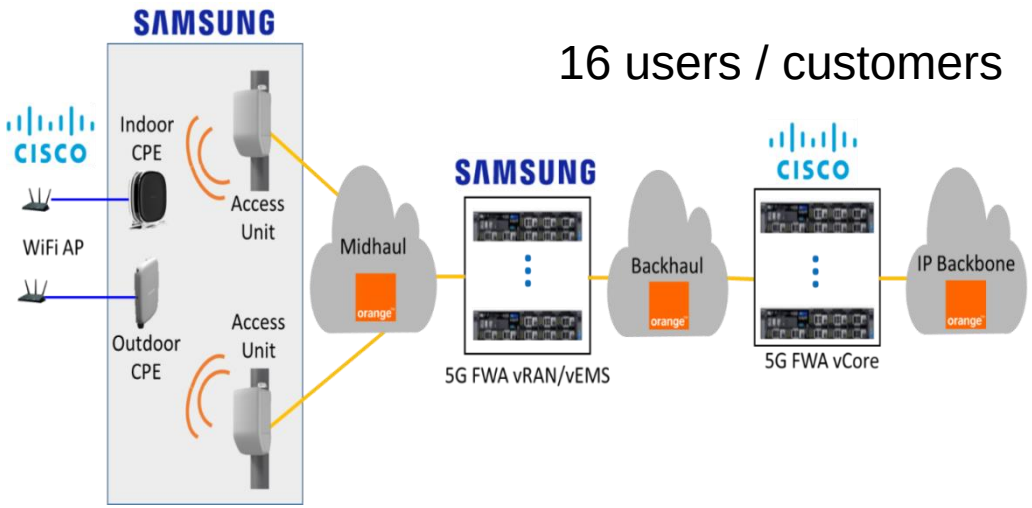

16 users / customers

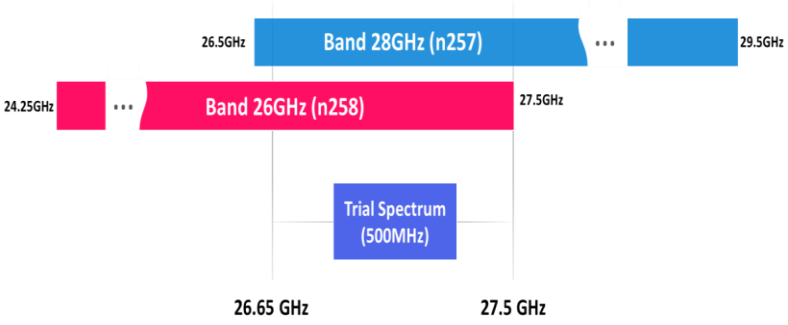

High level Objective

Assessing the performance of the cm waves system (26 GHz) for a fixed wireless usage in a suburban area.

01 System capacity and the throughput

02 Coverage and especially the propagation loss impacts

03 5G MIMO solution

04 Quality of service.

orange SAMSUNG CISCO

Fixed Wireless Access Testing Conclusions

Rapporteur: orange

Overall, the use of cm waves system has proved suitable for FWA

- ✓ Customer Premises Equipment in Line of Sight conditions, both outdoor and indoor, delivered a solid performance in the downlink almost regardless of radio conditions, whereas uplink performance was more dependent on radio conditions. Due to a powerful downlink beamforming mechanism, Non-Line of Sight Outdoor CPEs showed a decent performance providing current fibre-like service levels in the downlink.
- ✓ Outdoor-to-Indoor Loss did have an impact on radio conditions. Even then DL performance was good but UL performance decreased.
- ✓ Initial RF Planning simulation is in line with the results obtained in the field

Peak throughput : Performance has been stable while testing. The throughput variance was between 1.7Gbps ~ 2.0Gbps for DL and 440 Mbps and 540 Mbps for UL.
Cell throughput: A Max Cell throughput of 2.98 Gbps with 4 CPEs and with the activation of Multi-Users-MIMO has been achieved.

SU-MIMO vs MU-MIMO: Cell Throughput Gain: +79% & +56% when MU-MIMO is activated. FWA scenario is pretty well adapted to MU-MIMO feature due to the usage stability.

Quality of Service:

- No latency delays whether CPE was located on good or poor RF condition.
- FTP: Reach to Peak throughput within 1 sec.
- Streaming Service: No buffering during streaming service with two 4K high resolution Ultra HD streaming videos

System data rates

Rapporteur: 中国移动 China Mobile

- Base Station Configuration

Configured Parameter	Parameter Value
Frequency Band	3.5GHz
BS bandwidth	100MHz
BS output power	200W
Duplex Mode	TDD
Frame structure (DL/UL Ratio)	DL:UL=3:1

- User Distribution

•System Peak Rate

- 12 users located in High SINR Points

•System Average Rate

- 12 users located in different SINR Points
- Excellent: Good: Medium : Bad =2:3:4:3

- Test Results

		Test Results		Recalculated Results		Meet the Req.?
		Throughput (bps)	Spectrum Efficiency (bps/Hz)	Throughput (bps)	Spectrum Efficiency(bps/Hz)	
System Peak Rate	Uplink	1.02Gbps	10.2bps/Hz	4Gbps	40bps/Hz	
	Downlink	6.03Gbps	60.3bps/Hz	8Gbps	80bps/Hz	
System Average Rate	Uplink	990Mbps	9.9bps/Hz	3.96Gbps	39.6bps/Hz	
	Downlink	4.03Gbps	40bps/Hz	5.3Gbps	53bps/Hz	

Overall Conclusions/Recommendations

- Architectural Highlights/Gaps
  - CU/DU split: the need for open interface F1 and functional split agreement
  - CP/UP split: beyond current 3GPP standardization, but widely embraced by the operator community; heated discussion on open interface E1 and multi-vendor, RRM implementations in O-RAN, etc.
  - Fronthaul: the fact that we have not been able to achieve FH testing in PoC phase is due to lack of well-established interface, but hopefully in PCNT.

- Performance Statements (Highlights/Gaps)
  - We saw most of the performance KPI results are meeting with the PoC success criteria
  - Some of the KPIs didn't meet criteria, which was due to functionality or feature missing implementation or due to environmental constrains. We recommend these to be checked during pre-commercial trial phase.

Thanks