3GPP TSG RAN Meeting #83
Shenzhen, China, March 18-21, 2019

RP-190218

Agenda Item: 9.2.1
Source: Qualcomm
Document for: Discussion, Decision

Motivation of Correction of SRS frequency shift in NR Rel-15

Motivation: Forward compatibility of “Reference Point A”

- **Reference Point A - OffsetToCarrier - Relation to DM-RS/CSI-RS scrambling**
  - Offset in frequency domain between Point A (lowest subcarrier of common RB 0) and the lowest usable subcarrier on this carrier in number of PRBs. Range is from 0 to 2199 (275*8-1).
  - Same Reference Point A for both DL & UL in TDD
  - Reference point A is used as the reference point of DL/UL DM-RS and CSI-RS sequences (38.211)

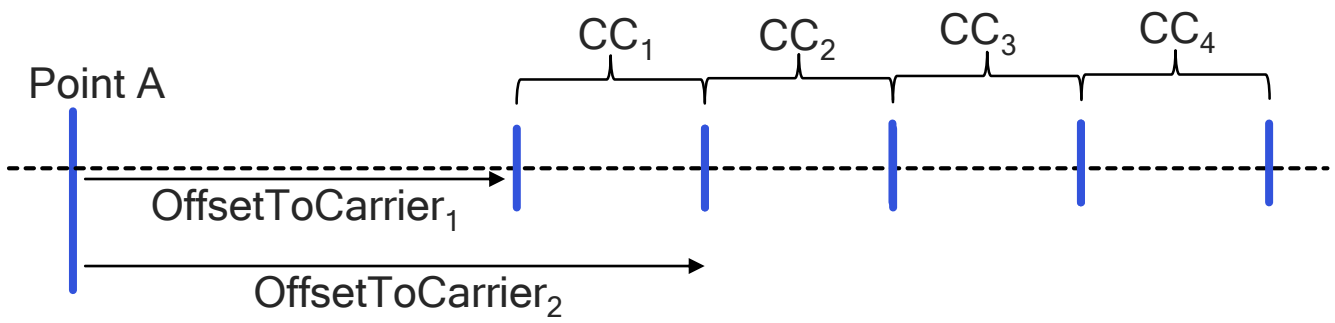

- **Forward Compatibility Considerations**
  - Introduction of new UEs in future releases with higher bandwidth with same sequence reuse (e.g., DM-RS MU-MIMO, CSI-RS reuse)

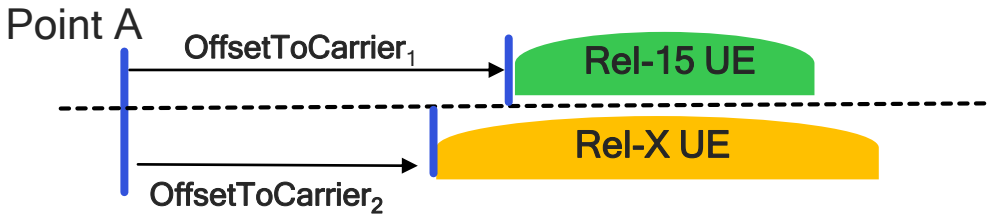

SRS frequency domain determination in current determination

- In current specification, the SRS starting RB is configured using the RRC parameter n_{shift} which takes the values 0-268 and is defined with respect to point A.
  - The SRS starting PRB cannot be configured to be farther than 268 PRBs from the reference point A. It effectively results to having reference point A at the start of each CC

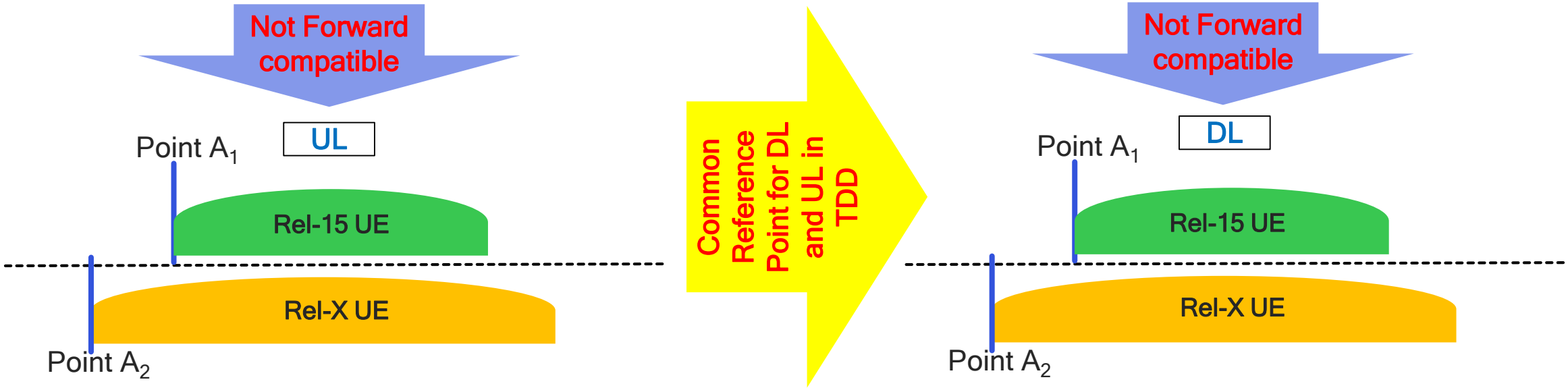

Proposal (RP-190219): Enable the cases with $n_{shift} < BWP_{start}$

$n_{shift} \geq BWP_{start}$

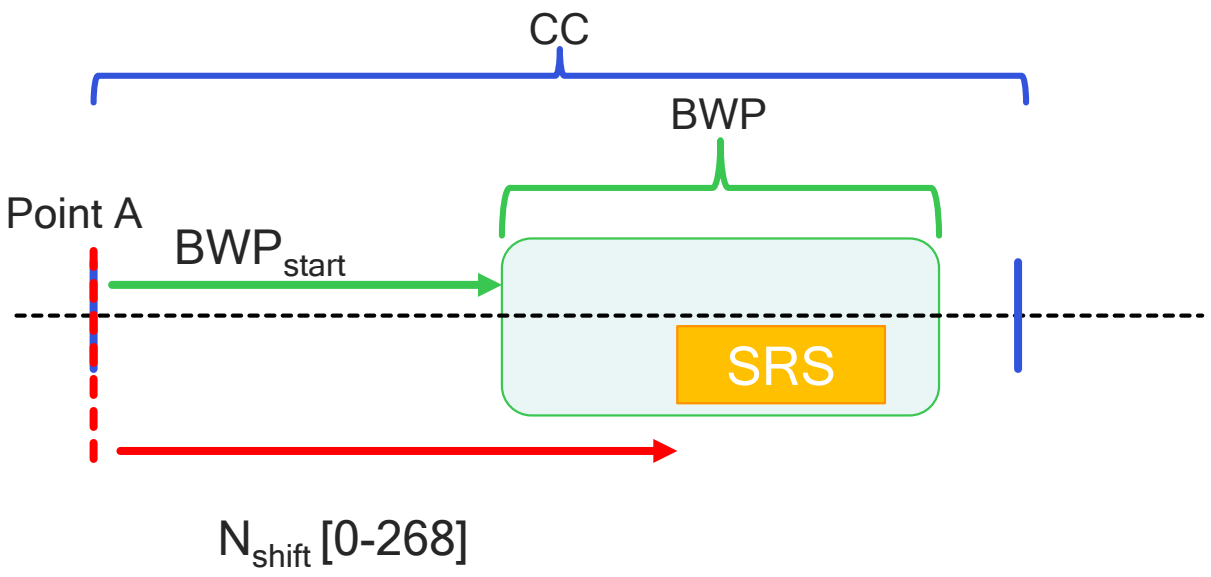

- These are the only usable cases in current specification.
- The CR does **NOT change** the gNB or UE behavior for these cases

$n_{shift} < BWP_{start}$

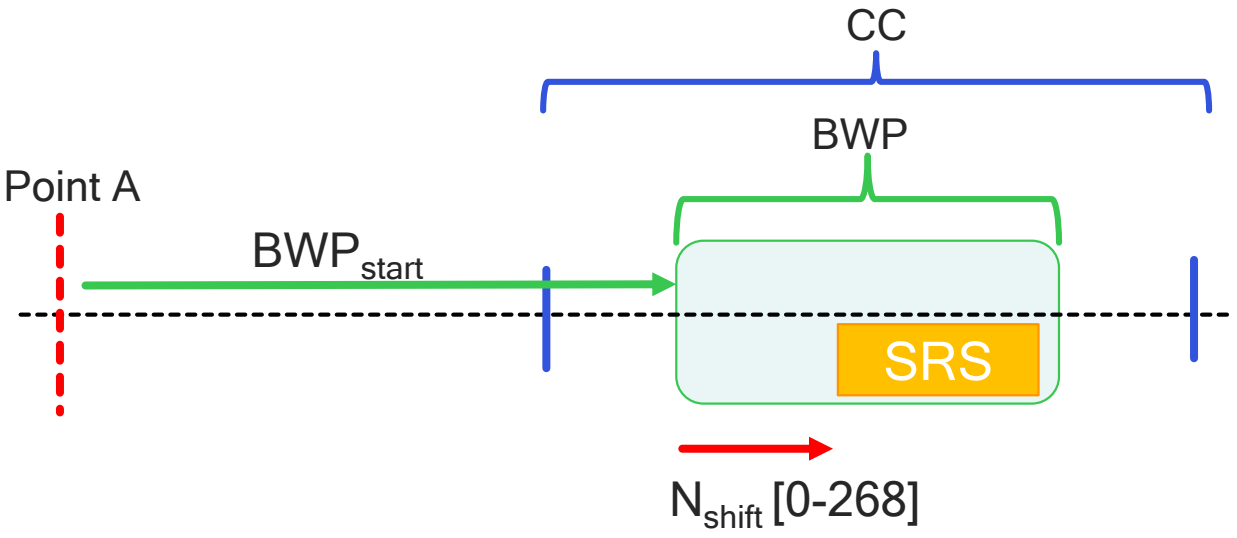

- Only changing the cases that were error cases before the CR
  - → Compatible with base stations not implementing the CR