3GPP TSG RAN Meeting #102
Edinburgh, Scotland, December 11-15, 2023

RP-233471

Scope on Ambient IoT

Agenda: 9.1.1.4
Source: Samsung
Document for: Discussion and decision

SAMSUNG

Background | RAN#101 outcomes

- **Recommendations in TR 38.848**

It is concluded in preliminary feasibility analysis at TSG-RAN level that Ambient IoT is feasible and beneficial, and further WG-level study is recommended prior to normative work.

For the initial WG-level study of Ambient IoT

- RAN is recommended to down-select further starting from:
  - Deployment scenario 1 with Topology 1
  - Deployment scenario 2 with Topology 1
  - Deployment scenario 2 with Topology 2
  - Deployment scenario 4 with Topology 1
  - Deployment scenario 4 with Topology 3
- FR1 licensed spectrum is recommended
  - Note: selection or prioritization between FDD and FDD/TDD is to be decided
- RAN is recommended to down-select to one or more of:
  - Spectrum in-band to NR, in guard-band to LTE/NR, and in standalone band(s)

	Deployment scenario 1	Deployment scenario 2	Deployment scenario 4
Environment (of device)	Indoor	Indoor	Outdoor
Basestation characteristic (if any)	Micro- or pico-cell	Macro- or Micro- cell BS	Macro- or Micro- cell BS
Connectivity topology	Topology (1), (2), (3)	Topology (1), (2), (3) Note: The location of intermediate or assisting node (if any) is indoor or outdoor	Topology (1), (2), (3)
Spectrum	Licensed FDD, licensed TDD, unlicensed	Licensed FDD, licensed TDD, unlicensed	Licensed FDD, licensed TDD, or unlicensed.
Coexistence with existing 3GPP technologies	Co-site or new site	Co-site or new site	Co-site or new site
Traffic assumption	DT and DO	DT and DO	DT and DO
Device characteristic	Device A or Device B or Device C	Device C may support Topology (1), (2), (3), Device A may support Topology (2), Device B may support Topology (2), (3)	Device C may support Topology (1), (2), (3), Device A may support Topology (2), Device B may support Topology (2), (3)
Recommended Topology	**Topology 1**	**Topology 1 & 2**	**Topology 1&3**

It is recommended to direct the RAN WGs to use the design targets reported in Clause 5. The RAN WGs are expected to refine the design targets according to their technical expertise, as needed.

SAMSUNG

Discussion points | RAN#102

#1 Clarification on spectrum assumption for Device A and Device B

- **Observation #1:** Carrier wave and backscatter signal are in same band. Transmission of carrier wave shall be controlled by the network.
- **Observation #2:** Feasibility has not been studied for the case that Ambient IoT DL (data or activation signal) and carrier wave/backscatter signal on different band for Device A/B, e.g., Ambient IoT DL on FDD DL band and carrier wave/backscatter signal on FDD UL band.
- **Observation #3**: For Topology 1a (as figure right) assuming carrier wave provided by BS, interference between carrier wave, backscatter signal and UL of legacy UEs, shall be investigated, as well as the trade-off with BS complexity.

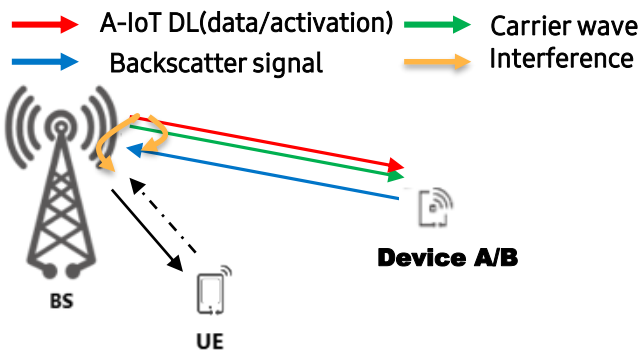

Topology 1a
Carrier wave from BS

Proposal #1: In the study, the transmission of carrier wave is assumed to be controlled by the network.

Proposal #2: For Device A/B, further study on whether same or different frequency is assumed for A-IoT DL, carrier wave, and backscatter signal.

Proposal #3: Whether carrier waver can be transmitted by BS at UL band of FDD spectrum needs to be clarified in RAN #102.

Proposal #4: Interference between carrier wave, backscatter signal and UL/DL signal for legacy UEs shall be investigated, as well as the trade-off with BS complexity.

SAMSUNG

Discussion points | RAN#102

#2 Clarification on Topology 1 with other node and Topology 3.

- The feasibility of to operate A-IoT DL and carrier wave/backscatter signaling in different band has not been studied. The motive to have separate node to provide carrier wave in Topology 1 (Topology 1b as figure below) is not clear (carrier wave and A-IoT DL are in same band) and require further study.
- For Topology 3a, if carrier wave and A-IoT Dl are in the same band, there is no motivation to support another node to provide carrier waver.

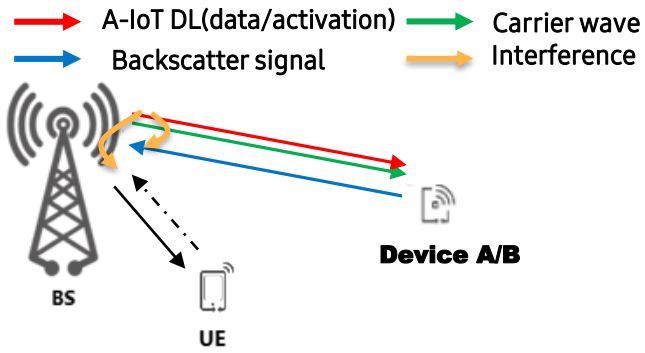

Topology 1a
Carrier wave from BS

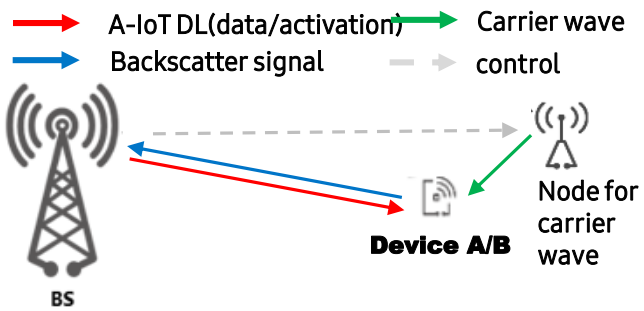

Topology 1b
Carrier wave from other node

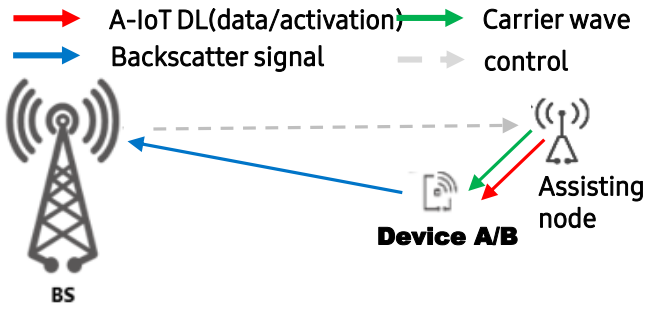

Topology 3a
Carrier wave from assisting node

Proposal #5: For Topology 1/2, considering the carrier wave for Device A/B can be provided by BS/intermediate node respectively, or by a dedicated node for carrier wave.
Proposal #6: For Topology 3a/3b, carrier waver for Device A/B is provided by assisting node/BS respectively.

SAMSUNG

Discussion points | RAN#102

#3 Discussion on Topology 2

- For Topology 2, the communication between intermediate node and Ambient IoT device shall consider unlicensed band, i.e., same as Uu.
- Similarly as for Topology 1, UL band (for FDD) can be considered for A-IoT DL/carrier waver/backscatter signal for Device A/B.
- Technical challenges for Ambient IoT is similar for Topology 1 and Topology 2, except the Uu control of the intermediate node by BS.

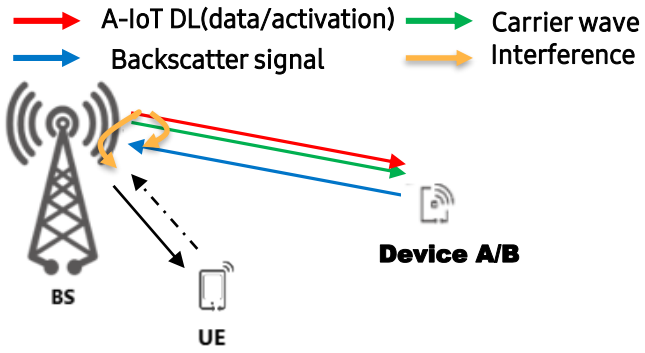

Topology 1a
Carrier wave from BS

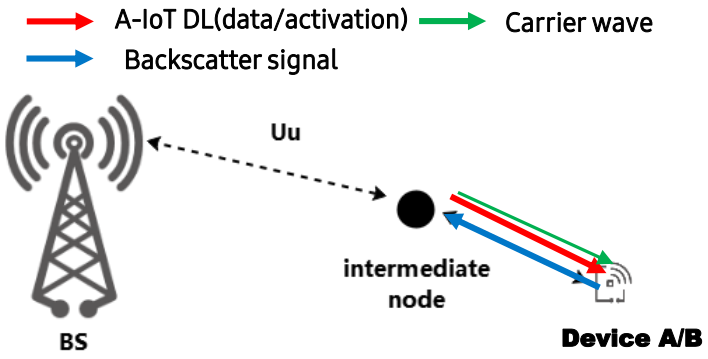

Topology 2

Proposal #7: Deprioritize Topology 2 in the study.

SAMSUNG

Discussion points | RAN#102

#4 Device type

- Passive (type A/B) vs. Active (type C)
  - At this point, Not clear and premature to select which devices types are feasible or has more market values, thus it is not possible to down select without checking benefit/complexity/feasibility of each device types.
  - We better focus on all device types and have a checkpoint whether down selection is necessary or not

Proposal#8: Study first for all device types for comparing benefit/complexity/feasibility and have a checkpoint whether to down-select

Possible Objectives | Scenarios, topology, frequency band

Proposals for potential SI scope

Focus study only in Rel-19

For device type, consider

- Device C as well as A/B

For deployment scenarios and topology, consider

- Deployment scenario 1, 2, and 4 with Topology 1
- Deployment scenario 4 with Topology 3

Note: carrier wave for Device A/B is assumed to be transmitted by BS and Assisting node for Topology 1 and 3 respectively

For frequency band, consider FR1 licensed spectrum including study the feasibility of the following

- TDD and FDD
- Spectrum in-band to NR, in guard-band to LTE/NR, and in standalone band(s) are considered.

Note: for Device A/B, same band is assumed for Ambient carrier wave and backscatter signal.

For supporting functions

- Command, inventory, and positioning

SAMSUNG

Possible Objectives

Proposal for potential SI objectives (RAN1/2/3/4):

- Study evaluation methodology, KPIs, and design target for each deployment scenarios/topology (RAN 1)
- Feasibility study of device architectures and Tx/Rx RF characteristics (RAN1/RAN4)
- Study necessary physical layer aspects for Ambient IoT, focusing on A-IoT DL control signaling/channel, carrier wave (for Device A/B), and backscattering signaling. (RAN1)
- Study, if needed, necessary signaling for network-controlled node for carrier wave (for Topology 1) and/or assistance node (for Topology 3) (RAN1)
- Study, if needed, compact protocol stack and lightweight signaling procedure, including mobility aspects (for Device C) (RAN2)
- Study RAN architecture and necessary signaling support, if needed (RAN3)
- Feasibility study of RRM impact including initial access, mobility and measurement for Device C (RAN4)
- Study on the spectrum and coexistence analysis for Ambient-IoT (RAN4, RAN1)
    - Frequency band for UL (carrier wave and backscatter signalling) and DL for Device A/B for each topology with and without dedicated carrier wave node
    - Coexistence analysis consider legacy UE DL, legacy UE UL, Ambient-IoT DL, and Ambient IoT UL (including carrier wave for Device A/B)

SAMSUNG