3GPP TSG RAN Meeting #102
Edinburgh, UK – Dec. 11th – 15th, 2023

RP-233270
Agenda Item 9.1.1.6

Rel-19 LP-WUS/WUR: Waveform

MediaTek Inc.

Overview

- LP-WUS waveform is the major remaining issue for Rel-19 LP-WUS/WUR scoping

Waveform-option-1 + waveform-point-3, or waveform-point-3 only → Further downselection
- Waveform-option-1: OOK-1 and/or OOK-4, as described in section 7.2.1.1 (A)(D) in TR38.869.
- Waveform-option-3: Harmonized design that accommodates OOK-1/OOK-4 and OFDM waveform, i.e., specified overlayed OFDM sequences over OOK symbol

- This contribution provides MediaTek views on
  - Why waveform option-3 should be supported
  - What waveform design directions are important to specify

LP-WUR Migration with Waveform Option-3

- **Observation 1:** OFDM-based LP-WUR can inherent/simplify existing NR receiver design
- **Observation 2:** RF requirements are similar between OFDM and OOK based LP-WURs, but OOK WUR assumes 1/10 or lower power consumption
  - RAN1: LP-WUR in same carrier as MR (band support complexity similar for OOK and OFDM)
  - RAN4: NR ACS requirements apply to LP-WUR (filter requirements similar for OOK and OFDM)
  - OOK-based LP-WUR potentially requires major design change to achieves 1/10 or lower power consumption target
- **Proposal 1:** Support of Harmonized waveform option-3 for time to market (OFDM WUR) and migration to lower power consumption (OOK WUR)

OFDM-based LP-WUR; power values (3GPP unit): 4 – 10

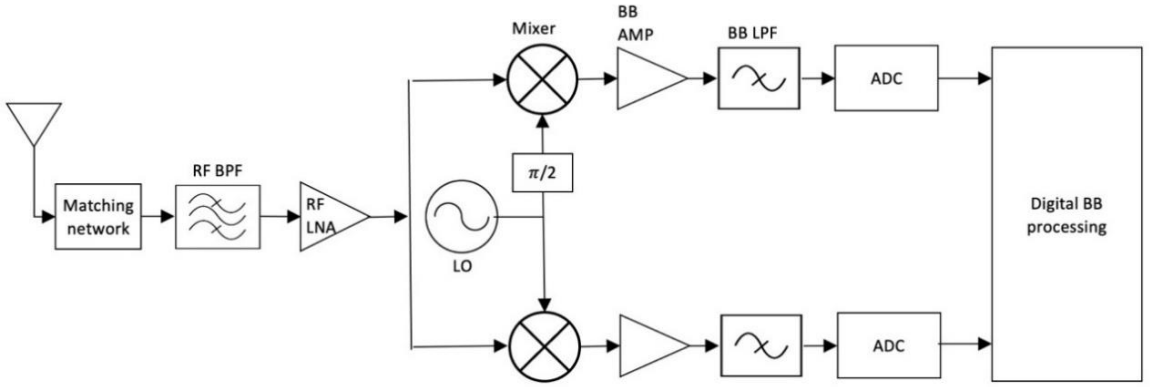

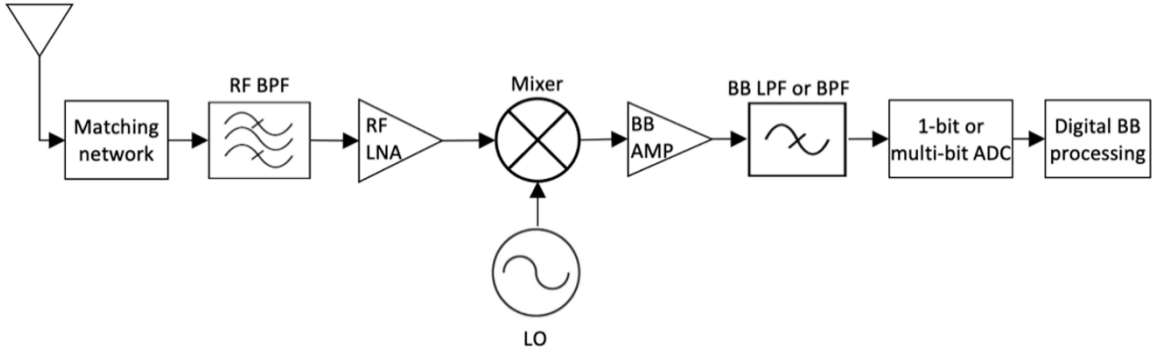

OOK-based LP-WUR ; power values (3GPP unit): 0.1 – 0.5

Design Direction: Min. RF Reception Time

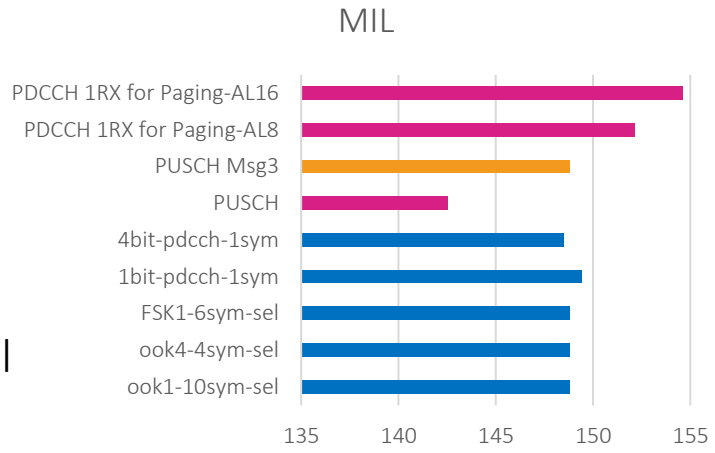

- RF dominates LP-WUR power consumption, and minimizing RF reception time is critical
- Required number of OFDM symbols (12-RB span) to achieve MSG3 coverage:

	OFDM LP-WUR	OOK LP-WUR
OOK-1	10 symbols (Selective combining)	
OOK-4	4 symbols (Selective combining)	
OFDM (1~4-bit PDCCH)	1 symbol (Sequence matching for 1~4-bit PDCCH)	N/A

- **Observation 3**: The minimum RF reception time for OFDM and OOK based LP-WURs are different
- **Proposal 2**: Harmonized waveform design ensures minimum RF reception time for both OFDM and OOK LP-WURs

≤2 symb. for OFDM	≤12 symbols for OOK1/4

Design Direction: Reuse/Extend Legacy Design

- For OFDM-based LP-WUR, reusing/extending legacy wake-up designs:
  - Idle/inactive-mode, reuse R17 PEI PDCCH as OFDM sequence
    - Restricting PEI payload size to 4-6 bits allows sequence-matching detection over limited number of PDCCH outcome
    - According 8.1.1.1.2 of TR 38.869, enabling OFDM-based LP-WUR can provide >60% average power saving gain
    - One design to support both R17 PEI UE and R18 LP-WUR UE
  - Connected, reuse R16 DCP PDCCH as OFDM sequence
    - Restricting DCP payload size to 4-6 bits allows sequence-matching detection over limited number of PDCCH outcome
    - According 8.1.2.2.2 of TR 38.869, enabling OFDM-based LP-WUR can achieve >16% power saving with UPT difference -1.7%
    - One design to support both R16 DCP UE and R18 LP-WUR UE
  - Potential extension by defining new payload to subgroup/UE mapping for wake-up of more subgroups/UEs with small payload size
    - NB-IOT WUS like sequence-subgroup mapping design can be considered
  - Necessary performance requirements for OFDM-based LP-WUR utilizing sequence-matching detection

Recommendations

- **Recommendation 1:** Support of Harmonized waveform option-3
  - Time to market (OFDM WUR) and migration to lower power consumption (OOK WUR)

- **Recommendation 2**: Harmonized waveform design ensures minimum RF reception time for both OFDM and OOK LP-WURs

≤2 symb. for OFDM	≤12 symbols for OOK1/4

- **Recommendation 3:** For OFDM-based LP-WUR, reusing/extending legacy wake-up designs
  - Enabling sequence-matching detection based on DCP/DCI format 2_6 for CONNECTED mode UEs and PEI/DCI format 2_7 for IDLE/INACTIVE UEs by, e.g., restricting payload size to [4-6] bits
    - **Aiming for commonly operate legacy UEs and R18 LP-WUS UEs based on reused/extended legacy wake-up designs**
  - Necessary performance requirements for OFDM-based LP-WUR utilizing sequence-matching detection

Thank you!