3GPP TSG RAN Meeting #102
Edinburgh, Scotland, 11th – 15th December, 2023

RP-233016

Ambient IoT in Rel-19

AI: 9.1.1.4

CATT

New Market of Ambient IoT in Cellular Network

中信科移动 CICT Mobile

- SA1 use cases are categorized to indoor/outdoor and inventory/sensor/positioning
  - System and physical signal/channel design and procedures need to support of the required device functions
    - Inventory control – ambient IoT devices with low cost and low power consumption
    - Device sensing – signal design in support of device sensing
    - Device positioning – identification of device positions and increasing the hearability of positioning signals
- Use cases
  - Inventory management
  - Production and component tracking
  - Mobile tracking and supply chain distribution
  - Tags for identification, tracking, and positioning
- Ambient IoT in Cellular network
  - 5G NR network and UEs as the framework as the ambient IoT device access point
  - Support device mobility

Rel-18 RAN Study of Ambient IoT

- Deployment scenarios
  - Indoor
  - outdoor
- Device types – capability of energy storage and receiver sensitivities
  - Device A: No energy storage, no independent signal generation, i.e. backscattering transmission
  - Device B: Has energy storage, no independent signal generation, i.e. backscattering transmission. Use of stored energy can include amplification for reflected signals
  - Device C: Has energy storage, has independent signal generation, i.e. active RF component for transmission
- Operation spectrum & duplex – Licensed/Unlicensed, FDD/TDD
  - Signal/channel design in support of sensing in FDD and TDD
  - Signal design for the passive device with backscattering transmission and active device with self-Tx

Rel-18 RAN Study of Ambient IoT Connectivity Topologies

- The NR system and signal/channel design would be based on the deployments and the connectivity topologies from RAN study
  - System design is to accommodate different types of Ambient IoT devices and their coverage range
  - Uu and PC5 interface would be support for network access and control of the Ambient IoT devices

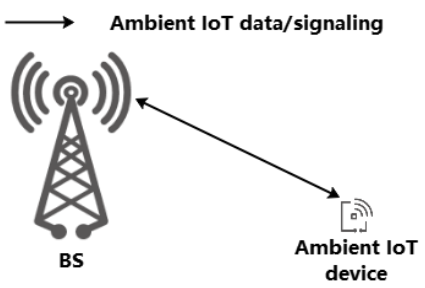

Topology 1： BS ↔ Ambient IoT device

- In Topology 1, the Ambient IoT device directly and bi-directionally communicates with a base station.
- The communication between the base station and the ambient IoT device includes Ambient IoT data and/or signalling.
- This topology includes the possibility that the BS transmitting to the Ambient IoT device is a different from the BS receiving from the Ambient IoT device.

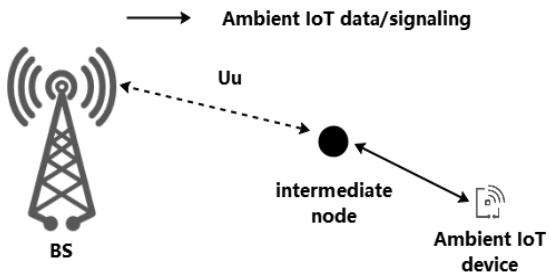

Topology 2： BS ↔ intermediate node ↔ Ambient IoT device

- In Topology 2, the Ambient IoT device communicates bi-directionally with an intermediate node between the device and base station.
- The intermediate node can be a relay, IAB node, UE, repeater, etc. which is capable of Ambient IoT.
- The intermediate node transfers the information between BS and the Ambient IoT device

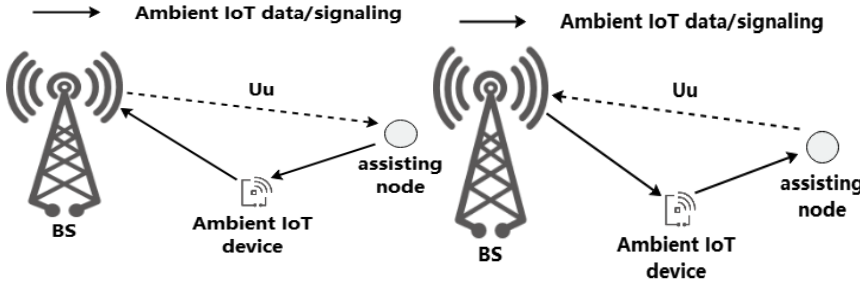

Topology 3 ： BS ↔ assisting node ↔ Ambient IoT device ↔ BS

- In Topology 3, the Ambient IoT device transmits data/signalling to a base station, and receives data/signalling from the assisting node; or the Ambient IoT device receives data/signalling from a base station and transmits data/signalling to the assisting node.
- The assisting node can be a relay, IAB, UE, repeater, etc. which is capable of ambient IoT.

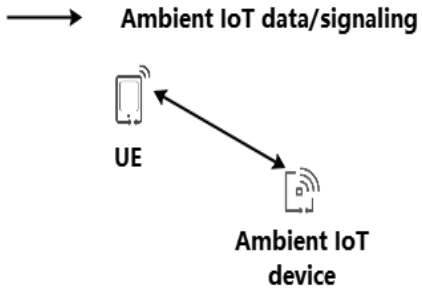

Topology 4:UE ↔ Ambient IoT device

- In Topology 4, the Ambient IoT device communicates bi-directionally with a UE.
- The communication between UE and the ambient IoT device includes Ambient IoT data and/or signalling.

Rel-18 RAN Study Results of A-IoT Design Target

System Design Target	Design Target values
Device power consumption	Device A: The power consumption target during transmitting/receiving is [≤ 1 μW] or [≤ 10 μW]
	Device B: Device A power consumption ≪ Device B power consumption < Device C power consumption, or Device A power consumption ≤ Device B power consumption < Device C power consumption
	Device C: ≤ 1 mW to ≤ 10 mW
Device complexity	Device A: The complexity target is to be comparable to UHF RFID ISO18000-6C (EPC C1G2).
	Device B: Device A complexity < Device B complexity < Device C complexity
	Device C: The complexity target is to be orders-of-magnitude lower than NB-IoT
Coverage	the maximum distance of 10 – 50 m for indoor the maximum distance of 50 – 500 m for outdoor
Data rate	At least for uplink, maximum not less than 5 kbps, and minimum not less than 0.1 kbps
Maximum message size	approximately 1000 bits Tx from A-IoT device, based on the maximum application layer packet size.
Latency	Longer latency target: 10 seconds Shorter latency target: 1 second
Positioning accuracy	Absolut accuracy • 1~3 meters @ 90% indoor location. • Several tens of meters @ 90% outdoor location Relative accuracy • 1~3 meters @ 90% indoor and outdoor location
Connection/device density	150 devices per 100 m2 for indoor scenarios. 20 devices per 100 m2 for outdoor scenarios.
Device speed	10 km/h, at least for indoor scenarios Note X: Absolute speed is used in Topology (1), (2) and (3). Relative speed is used in Topology (4)

Rel-18 Study Results on RAN Functionalities for A-IoT

Design target	Functionality
Device power and complexity	Ultra-low power transceiver / Device architecture Transmitting based on backscattering (including carrier wave provision for backscattering) for Device A and Device B Low-complexity waveform / modulation / coding / signal / channel / synchronization scheme, if applicable to Device, robust to frequency error and timing error Compact protocol stack and lightweight signaling procedure
Coverage	Techniques for the required coverage with low device complexity (e.g., forward error correction, enough receiver sensitivity and transmitted power, reflection gain enhancement), if applicable and needed to the Device type
User experienced data rate	Compact protocol stack and lightweight signaling procedure Potential schemes as applicable, such as, e.g. flexible modulation/code rate, resource allocation, multiple access methods
Maximum message size	Compact protocol stack and lightweight signaling procedure Signal/channel design which can deliver the maximum message size
Latency	Access mechanisms and signaling procedures which allow meeting the latency target
Positioning accuracy	Positioning method(s) applicable to the connectivity topologies for the required positioning accuracy for Ambient IoT device,
Connection/Device density	Efficient multiple access methods and contention handling Ability to control the operation for one or more of the Ambient IoT devices, within the applicable area, including e.g. the selection of devices
Moving speed of device	Physical layer design (low-order modulation, reference signal etc. and others) robust to the appropriate ranges of moving speeds

Requirement	Functionality
Device management	RAN aspects of identification, activation/deactivation, and other management functionalities of Ambient IoT devices and other involved devices (e.g. readers) if applicable, and related signalling to/from the CN if any/needed
Security*	Authentication (when needed), encryption, data integrity, authorization (when needed)
Mobility	Mobility management (at least cell selection/re-selection -like function) for device C Handling for Devices A and B
Interference management and coexistence	Interference management/coordination scheme Potential full duplex capability of BS/UE, including self-interference suppression, may be required for BS/UE to communicate with Device A and Device B, if carrier wave transmission and backscatter reception is performed simultaneously at least on the same band by the same BS/UE. Coexistence with existing and adjacent network infrastructure, and possibility to reuse existing network deployments or use new network deployments.
CN connectivity	RAN functionality for Ambient IoT to support CN (when present), with possibility of potential lightweight protocol stack architecture and simplified signaling procedures.
Compatibility among connectivity topologies	From the perspective of Ambient IoT device, strive for operation to be agnostic to RAN connectivity topologies.

Principle of Rel-19 Ambient IoT Study in Working Groups

中信科移动 CICT Mobile

- Timeline: tentative plan of 12 month study followed by 6 month works
- Rel-18 Study results on A-IoT in RAN are used as the framework and high level requirements for the A-IoT system design
- The aspects of the NR system design in support of ambient IoT devices
  - NR system enhancement mostly common between FDD/TDD
  - Same system enhancement for device types A, B, and C
  - Adaptive and flexible for different use cases.
  - Feasible and configurable for different deployment scenarios.
  - Support different topologies and connectivity to achieve the design target of coverage, data rate, message size, and positioning accuracy.
- The objectives of the study could be a selective subset of spectrum, device types, use cases, deployment scenarios, and connectivity in Rel-19
  - The study results from WGs in Rel-19 should be useful for the potential normative work and expandable for future study and work
  - The study of the selective subset should take into account other subsets in achieving common solution in the system design

Ambient IoT Device Characteristic for NR System Design

- Ambient IoT device characteristics
  - Communication characteristic – ambient IoT device is an responsive device and not an interactive device
    - Responsive communication – Push notification
      - Network node (gNB, intermediate or assistant nodes) or UE reader sends the “interrogation” signals to the ambient IoT devices.
      - A-IoT devices would respond to the interrogation based on the pre-configured/pre-programed functions
        - The pre-configured/programed functions should be common for Types A, B, and C devices
        - Additional functions could be supported by Type C devices with independent Tx power
  - Initial access procedure – ambient IoT devices would be queried by the network or UE reader through “initial access interrogation” signals with devices feedback of UE Identification and encoded security challenge

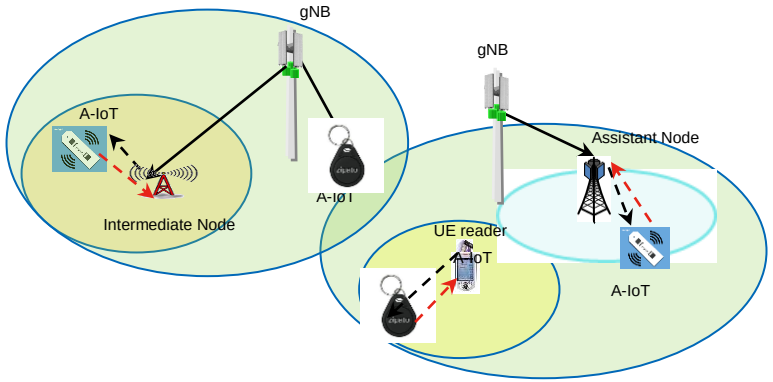

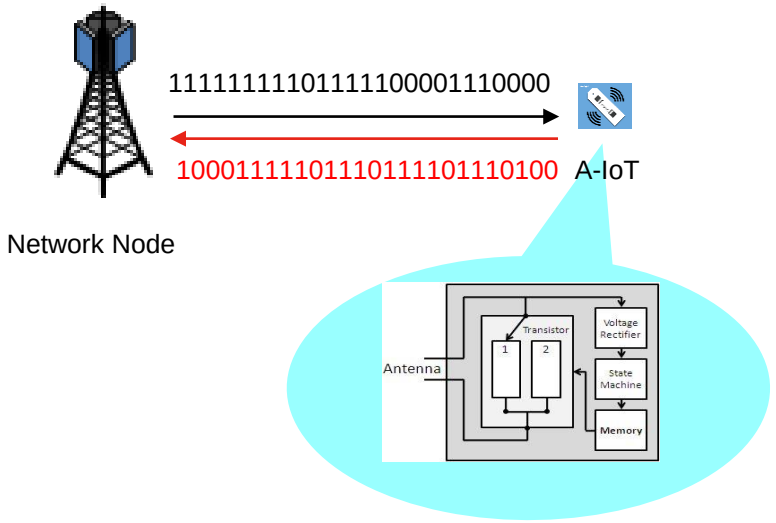

Physical Layer Signals and Waveforms for Ambient IoT

- Physical Layer signals for responsive ambient IoT devices
  - The responsive A-IoT devices would backscattered/generated the response signals back to the network node/UE reader within time D (in the range of μ seconds based on round trip propagation delay, 1 μs Propagation delay = 300 m round trip distance)
    - The returned signals are within the CP of the NR signals.
    - Duplex interference would be expected at the receiver for both NR FDD and TDD system
    - Duplex Interference mitigation schemes
      - Isolated received antenna for backscattered/generated signals at the network node/UE reader
      - Interference cancellation of DL interrogation signal

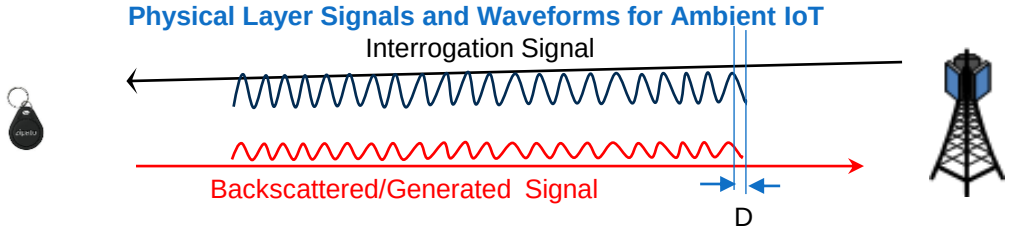

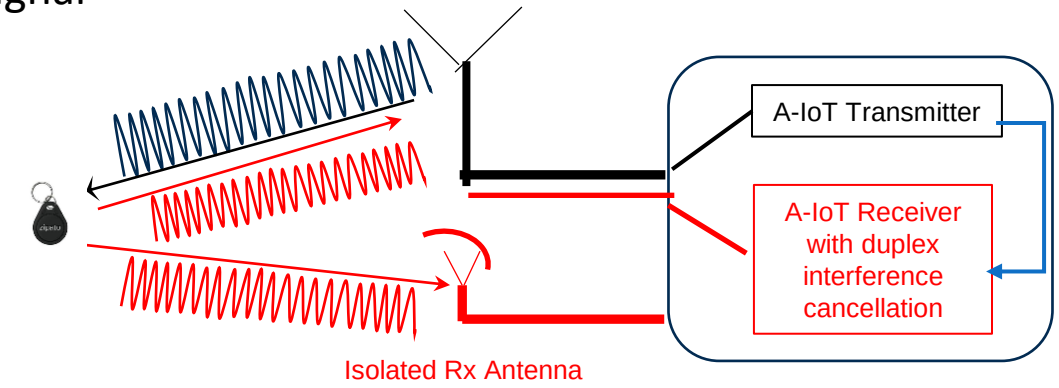

Higher Layer and Protocol Stack for A-IoT

- Protocol stack
  - Thin protocol functions
  - Bit stream with data and embedded inband control signaling
- Control Plane Protocol and control signaling procedure
  - Different "Interrogation" signals (bit-stream) could be used for different purpose
    - The state machine would direct the signals to the target stored control function in the shift register (device types A and B) or control module (device type C) based on the received bit stream
  - The control function in the A-IoT device
    - Preconfigured/pre-programed control signaling function stored in the shift register (memory) of device types A and B
    - The thin protocol state control module of device Type C
  - A-IoT device response of control signaling query from the control interrogation signal
    - The control signaling response bit stream from the output of shift register is backscattered to the network node/UE reader for device types A and B
    - The control signaling response bit stream is generated from output of control module and transmitted to the network node/UE reader for device type C
- User Plane Protocol
  - User plane functions are stored at the network node/UE reader
  - Different interrogation signals are used to derive different function of data bit stream backscattered/generated from A-IoT devices

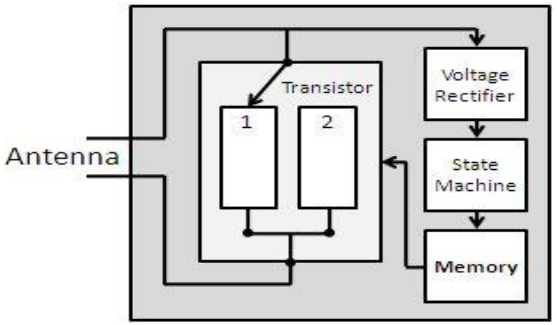

Control Interrogation signal

111111111011111000011100001001111110000

Backscattered/generated signal

1000111110111011110111	01011001111000 00
Inband control signaling	data

Authentication, Security, and Mobility Handling for A-IoT

- Ambient IoT is a responsive device
  - Authentication by backscatter/generated the UE ID and security challenged response from the received Authentication interrogator signal
    - Authentication of device will be intercepted and communicated from gNB to Core Network
  - Security – gNB control device security with information for CN
    - one or more security interrogation signals are used to verify the device integrity
    - Security challenge response is backscattered/generated from the pre-programed security logic in the shift register/control module for each interrogation signals
  - Mobility Handling of A-IoT devices
    - Ambient IoT device is queried by the network node/UE reader when it moves to different network node/UE reader with the authentication response

Authentication interrogation signal

0001111110111110000111000010011111 0110

Backscattered/generated signal

1110111110111011110111 0101100111100010

UE ID | Security Challenged

Security interrogation signal 1

0101111110001110000111000010000011 0110

Backscattered/generated signal

1011011110111011110110010110011110 0010

Security Challenged response 1

Security interrogation signal 2

0101001110001110000111000010001111 0110

Backscattered/generated signal

1011000110111011110110010110011000 0010

Security Challenged response 2

Ambient IoT Device Evaluation Methodologies

- Ambient IoT device evaluation is based on Responsive communication characteristics of the A-IoT devices
- Link level simulation modeling
  - Tx node sending interrogation signals
  - DL channel
  - Ambient IoT device received the interrogation signals and backscattered/generated the response signals
  - Rx node receive the response signals and decode the received information

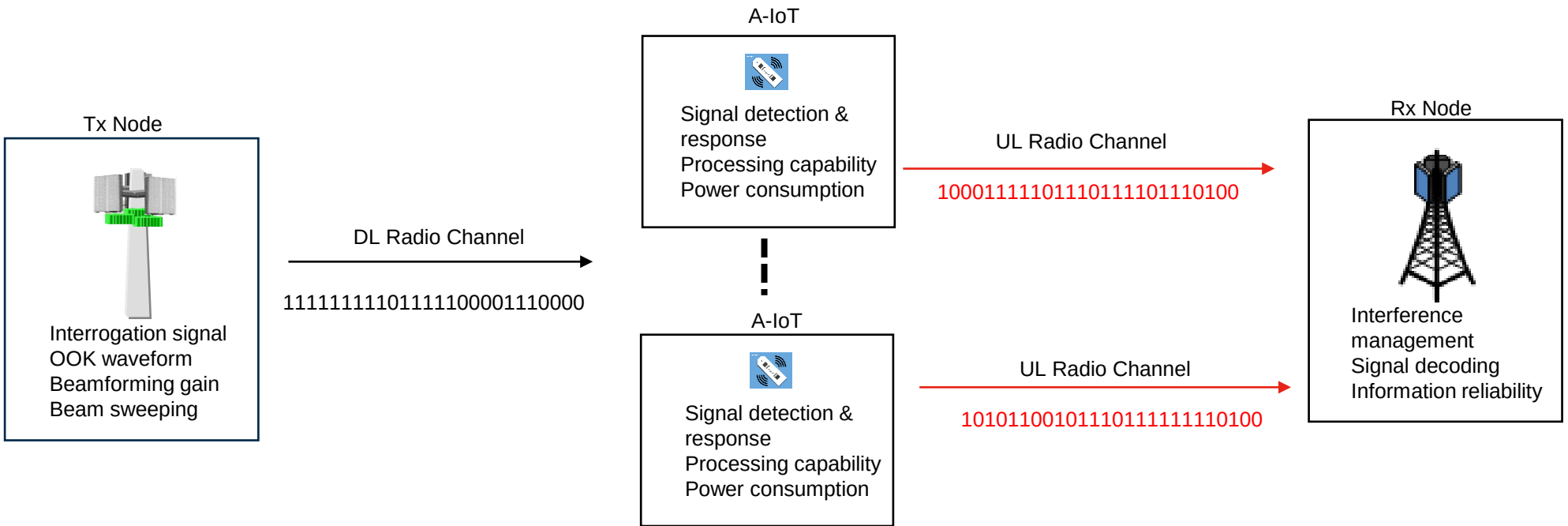

Modeling of the Ambient IoT Communication (1)

- Transmission node
  - Interrogation signals generation
    - Signal types – initial access, control, data, authentication, security, mobility etc….
    - Encoding method – Manchester,
  - Waveform – OOK, BPSK, QPSK
  - Signal spreading
  - Beamforming and beam sweeping – beamwidth, beam sweeping duration
  - Transmission configuration – number of Interrogation signals Tx within a beam

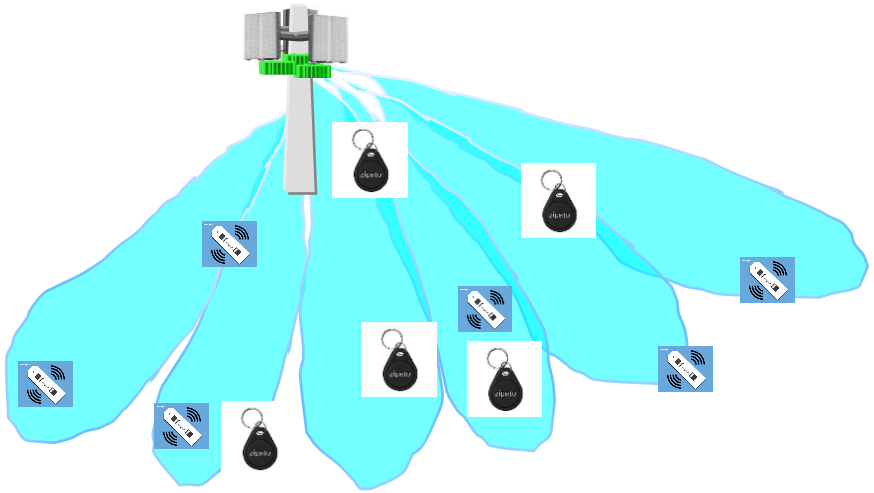

Modeling of the Ambient IoT Communication (2)

- Ambient IoT devices
  - Device structure modeling
    - Receiver capability – Type A, B, C devices
    - Receiver characteristics
      - Waveform
      - Delay
      - Signal strength loss during the process
  - Backscattered/Generated waveform – OOK, BPSK, QPSK

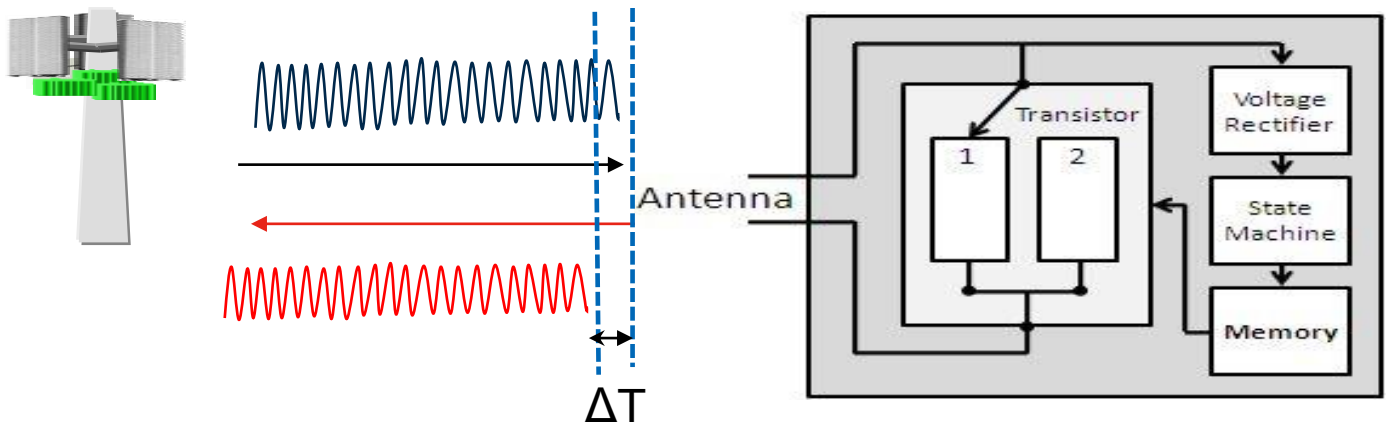

Modeling of the Ambient IoT Communication (3)

- Backscattered/Generated signal receiver
  - Modeling of interference
    - Full Duplex self interference modeling
    - Multiple A-IoT devices modeling
  - Decoding of Received signals
    - Received waveform – OOK, BPSK, QPSK
    - Decoding algorithm for the channel encoding
  - Received signal information set for hypothesis checking
    - Decision matrix and information correction for information data set
  - Interference cancellation scheme
    - Full duplex self interference cancelation – training of delay estimate of self interference
    - Multi-device cross interference
      - Prefix Signal sequence design for hypothesis testing
      - Tx sequence hypothesis testing

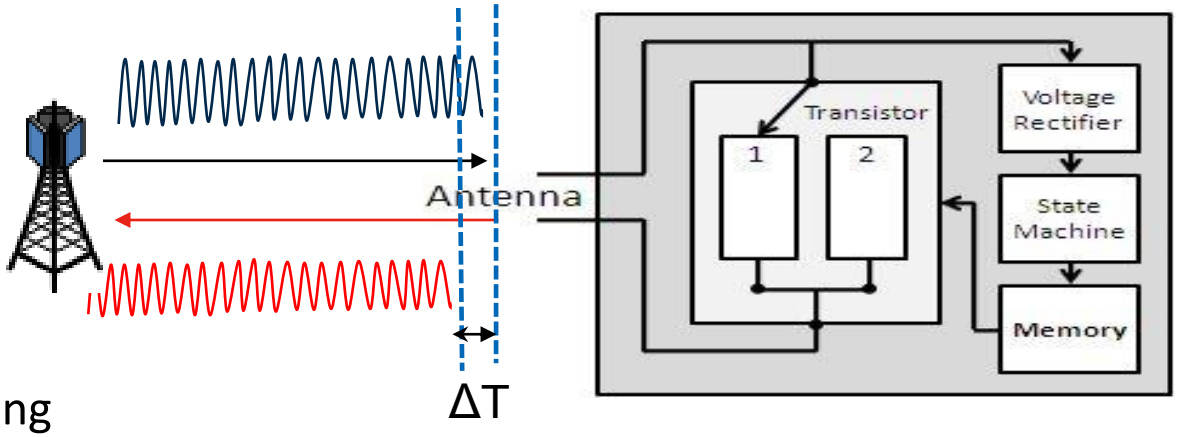

Ambient IoT SI – proposed objectives in RP-232745

- Consideration of Rel-19 IoT SI objectives:
  - 12 months Rel-19 WG studies
  - Limiting the scope of the study and work in Rel-19

- Potential objectives:
  - Consider all Devices A, B and C in the SI?
  - Down-selection among:
    - Deployment scenario 1 with Topology 1
    - Deployment scenario 2 with Topology 1
    - Deployment scenario 2 with Topology 2
    - Deployment scenario 4 with Topology 1
    - Deployment scenario 4 with Topology 3
  - FR1 licensed spectrum, focusing on FDD only
    - Downselection Spectrum in-band to NR, in guard-band to LTE/NR, and in standalone band(s)
  - Evaluations and remaining feasibility assessments
    - Device architecture and characteristics
    - Evaluation methodology and assumptions
    - Design target evaluations
    - Coexistence evaluations
  - Physical layer study on:
    - Waveform and multiple access
    - Frame structure and numerology
    - Modulation and channel coding
    - Physical layer signals/channels
    - Physical layer procedures including initial access and mobility, scheduling, (H)ARQ, power control, etc
  - Higher layers study on:
    - Compact protocol stack and lightweight signaling procedure, including mobility aspects
      - Control plane functionalities, including CN connectivity
      - User plane functionalities
      - Security aspects (*Note: This does not necessarily mean security has RAN impact)
  - RAN3 aspects for study:
    - Enabling necessary CN-RAN signalling
    - RAN architecture aspects, if any
  - RAN4 aspects for study:
    - Feasibility study of BS/UE/device architectures
    - Link budget study
    - Coexistence analysis
    - RRM

Rel-19 Study of Ambient IoT

中信科移动 CICT Mobile

Proposed Objectives of Rel-19 Ambient IoT study in working group

- **Study of the characteristics of ambient IoT devices (RAN1, RAN4)**
  - Receiver sensitivity and device energy storage and sustainability for power supply
  - Device capabilities in minimum data rate and coverage
- **Study the deployment scenarios with different connectivity topologies (RAN1, RAN2, RAN3)**
  - Study the direct link from the gNB to the ambient IoT
  - Study the functions of intermediate and assistant nodes for interconnection for different type of Ambient IoT device to the gNB
  - Study the feasibility and function of UE direct link to the ambient IoT devices
- **Study the physical signals/channels for the communication with ambient IoT device (RAN1)**
  - Study the signals and waveform for the communication with the ambient IoT devices
  - Study the physical channel structures and physical layer procedure for the communication with ambient IoT devices with different connectivity topologies
- **Study the enhancement of higher layer protocol for ambient IoT device (RAN2)**
  - Control function and interface for UE communication to the ambient IoT devices
  - Mobility management of ambient IoT devices
  - Security aspects of ambient IoT device
- **Study the architecture of ambient IoT device (RAN3)**
  - Study whether reuse the NAS signaling from CN function or simplify the function triggered by RAN
    - A-IoT device authentication
    - A-IoT device security