紫光展锐
UNISOC

**3GPP TSG RAN Meeting#102** **RP-232976**
**Edinburgh, GB, December 11-15, 2023**

| | |
|---|---|
| **Agenda Item:** | **9.1.1.3** |
| **Source:** | **Spreadtrum Communications** |
| **Title:** | **Duplex evolution in Rel-19** |
| **Document for:** | **Discussion and decision** |

# Views on duplex operation evolution

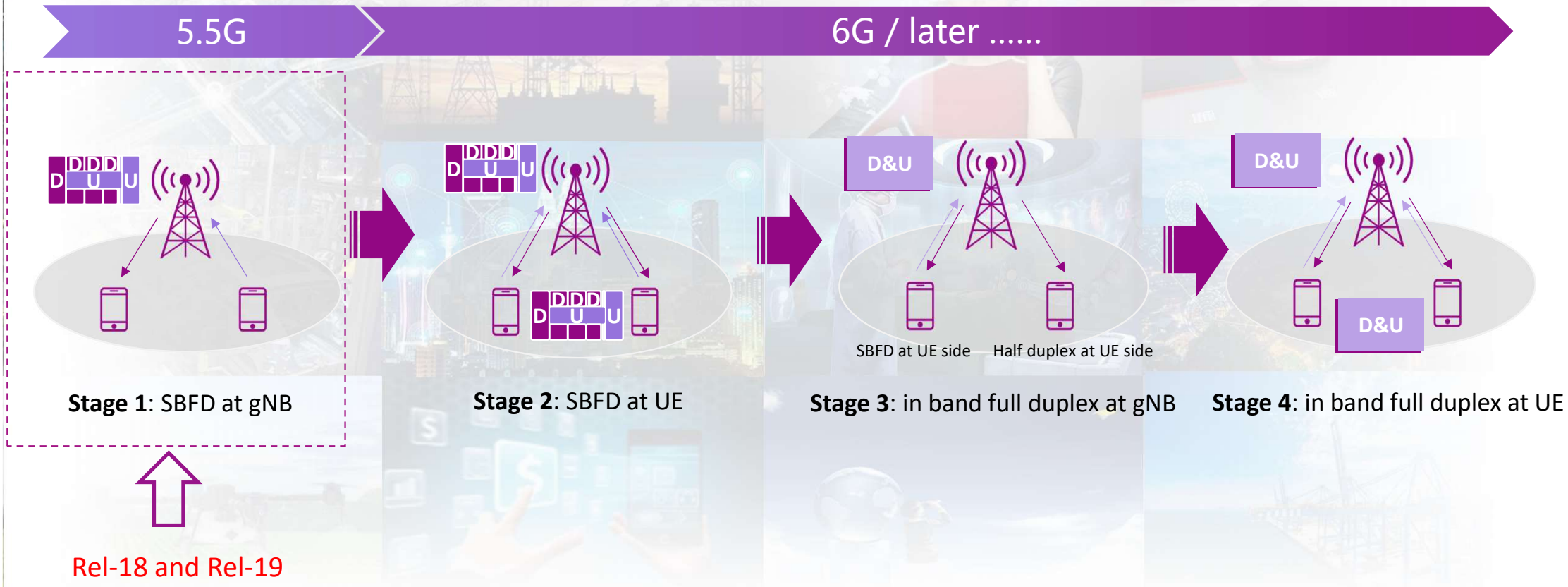

# Background

- **In Chair's summary for RAN Rel-19 Package, the following potential objectives are provided:**

## Evolution of duplex operation WI

- References: RWS-230488, RP-231540, RP-232613
- Potential objectives:
  - For subband non-overlapping full duplex (SBFD) operation at gNB side within a TDD carrier
    - [Semi-static/dynamic] indication of time location of SBFD subbands to UEs [in RRC_CONNECTED mode]
    - Semi-static indication of frequency domain location of SBFD subbands to UEs [in RRC_CONNECTED mode]
    - UE transmission and reception behavior and procedures in SBFD symbols and/or non-SBFD symbols
    - Note: followings are assumed based on TR 38.858
      - SBFD operation Option 4
      - Coexistence between legacy UEs and SBFD aware UEs in the cell operating SBFD at gNB side
      - SBFD scheme within a single configured DL and UL BWP pair with aligned center frequencies
      - Up to one UL subband for SBFD operation in an SBFD symbol (excluding legacy UL symbol/slot) within a TDD carrier
    - At least adjacent channel coexistence between two operators should be considered as a minimum.
  - Specify enhancements for CLI handling:
    - Support both the gNB-to-gNB co-channel CLI handling scheme(s) and UE-to-UE co-channel CLI handling scheme(s) (the detailed schemes are to be down-selected from those in TR38.858)
    - The SBFD operation drives the CLI enhancements, which are expected to be applicable to the dynamic/flexible TDD operation but without dedicated optimization
  - RF requirements for SBFD operation at gNB

Slide 20

In the contribution, Spreadtrum's view for those potential objectives are provided.

# Duplex Evolution in Rel-19 (WI)

## Objective

**Specify semi-static SBFD operation and related CLI handling enhancements:**

- **In this work item, the following are assumed:**
  - SBFD at the gNB side
  - Half duplex operation for TDD duplex mode at the UE side
- **Detail Objectives for SBFD operation in benefit scenarios**
  - Specify semi-static SBFD operation within a TDD carrier with aligned centre frequencies in RRC_CONNECTED mode
    - Specify semi-static subband signalling for SBFD operation (RAN1, RAN2)
      - Note: Co-existence cases should be considered
    - Specify UE transmission and reception behavior and procedure in SBFD symbols and/or non-SBFD symbols (RAN1, RAN2)
      - Resource allocation in frequency-domain for SBFD operation with unaligned boundaries
      - UL transmissions and DL receptions across SBFD symbols and non-SBFD symbols in different slots
      - Collision handling behaviors of SBFD aware in SBFD symbols
    - Specify CLI handling enhancements for inter-subband CLI only (RAN1, RAN3)
      - Inter-subband CLI measurement behavior and procedure for SBFD-aware UEs
      - Inter-gNB CLI measurement procedure including network information exchange
    - Specify BS RF requirement for SBFD operation (RAN4)

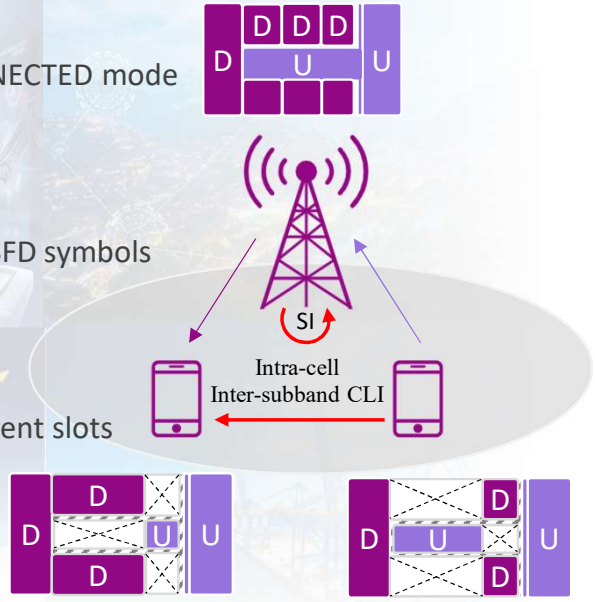

# Duplex Evolution in Rel-19 (WI)

紫光展锐 UNISOC

## Other aspects

- **CLI handling scheme**
  - No conclusion/recommendation was drawn on CLI handling scheme because of lack of simulation results in Rel-18 SI
  - CLI handling enhancement with dedicated optimization for dynamic/flexible TDD should not be included
  - Only basic CLI handling enhancement driven by SBFD operation (some may be applicable to dynamic/flexible TDD as well ) is considered in Rel-19 due to the limited TU
- **Random access using SBFD subbands in RRC_IDLE/INACTIVE mode**
  - Benefit was shown only by one company in specific frequency and scenario through UL link budget analysis
  - Performance on system level simulation in RRC_IDLE/INACTIVE mode was not evaluated in Rel-18
  - Inevitable uncontrollable interference introduced by idle/inactive UE to UEs receiving signal in downlink subband
- **Dynamic SBFD**
  - Simulation results were limited and results from different companies were divergent in Rel-18 SI
  - Results in huge additional specification works on top of semi-static SBFD

# Duplex Evolution in Rel-19 (WI)

紫光展锐 UNISOC

## Observations

### SIC requirements

| Parameter | Urban macro | Indoor hotspot | UE side |
|---|---|---|---|
| UL BW(MHz) | 20 | 20 | 20 |
| Transmit power(dBm) | 53 | 24 | 23 |
| Noise figure | 5 | 5 | 9 |
| Residual interference(dB) | 6 | 6 | 6 |
| SIC requirements (dB) | 155 | 126 | 121 |

- **Observation1: Almost the same SIC requirement for indoor hotspot and UE side**

### SIC capability (FR1)

| Parameter | gNB side | UE side | Gap |
|---|---|---|---|
| Spatial isolation | 50-80dBc | ~30dBc | 20-50dB |
| Frequency isolation | 45dBc | 28dBc | 17dB |

- **Observation 2: Big gaps in SIC capability between gNB and UE**

UE SIC capability is far from sufficient for SBFD operation study on UE side

No UE RF impact in Rel-19

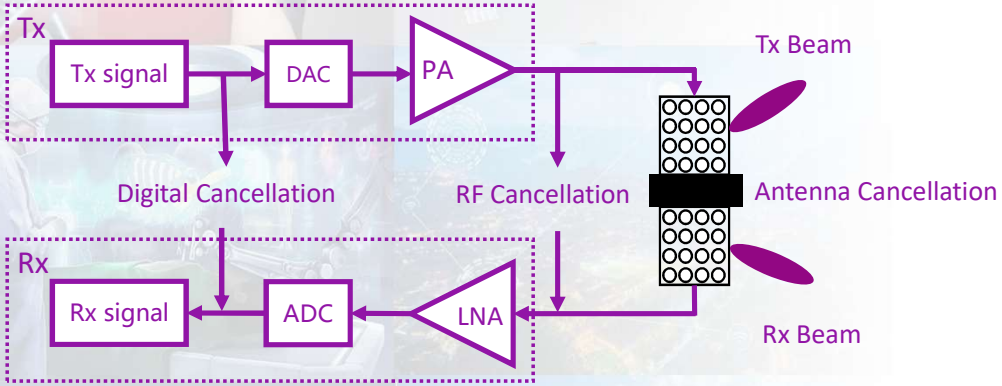


SBFD at UE Side should not be considered in Rel-19

# Proposals for Rel-19 duplex evolution

紫光展锐 UNISOC

**Proposal 1: Only basic CLI handling enhancement driven by SBFD operation is considered in Rel-19**

- Some may be applicable to dynamic/flexible TDD as well

**Proposal 2: Following objectives should be excluded from Rel-19 WID**

- Dedicated CLI handling enhancement for dynamic/flexible TDD
- Random access using SBFD subbands in RRC_IDLE/INACTIVE mode
- Dynamic SBFD
- SBFD at UE side

# Thanks

紫光展锐
UNISOC

紫光展锐
UNISOC