3GPP TSG RAN meeting #102
Edinburgh, December 11-15, 2023
Agenda item: 9.1.2.3

RP-232875

Further NR NTN enhancement

NEC

© NEC Corporation 2023

Background

- Based on the output of RAN#101, RP-232620, and the guidance from the RAN Chair, RP-232745, the potential objects for Non-Terrestrial Networks evolution - NR in Rel-19 are:
  - RAN1-centric
    - Coverage enhancements for Downlink focusing on both link-level and system-level
    - Robust Notification/Alert
    - Uplink capacity enhancement
  - RAN2-centric
    - Mobility enhancements
    - Enhanced GNSS Operation
  - RAN3-centric
    - Regenerative payload with full gNB
  - RAN4-centric
    - HPUE for UL CE
    - REDCAP

© NEC Corporation 2023

Further NR NTN enhancement in Rel-19 (1/3)

- **Support UL capacity/throughput enhancement**
  - Motivation: Rel-18 studied the handset UL to support VoIP, which is based on a limited data rate assuming the AMR 4.75 kbps codec. There is a clear demand from eMBB users for a higher data rate on the UL. From an operational perspective, there is a clear need to provide the service to more users. From a link-level perspective, a lower required SNR means fewer RBs or a higher MCS for a given user, which increases UL capacity or throughput. In another way, we can multiplex different UEs on the same UL resource to further improve the system UL capacity. Due to the LOS, small delay spread and small Doppler spread characteristic of NTN channel, spatial diversity, and code domain multiplexing are the only promising working solutions.
  - Objective: 1) Specify link-level enhancements to uplink physical channels to reduce the required decoding SNR and lead to higher UL capacity/throughput (e.g. Spatial Diversity Antenna Switching); 2) Specify code domain multiplexing for PUSCH to improve the capacity in radio resource-limited scenario.
- **Support DL coverage enhancement**
  - Motivation: Due to limited transmit power and/or processing bandwidth of the feeder link, a satellite could only provide service to partial areas of its footprint. To provide service to more users in a given area (within a beam) or to a larger percentage of its footprint (more active beams), DL coverage enhancement is required.
  - Objective: Study and specify link-level enhancements to downlink physical channels to enable the satellite to provide DL coverage to a larger area.

© NEC Corporation 2023

Further NR NTN enhancement in Rel-19 (2/3)

- **Support regenerative payload with full gNB:**
  - Select the gNB processed payload in TR38.821 to support regenerative mode.
  - NG interface enhancement if necessary
  - Specify the support of full gNB on board in TS 38.300

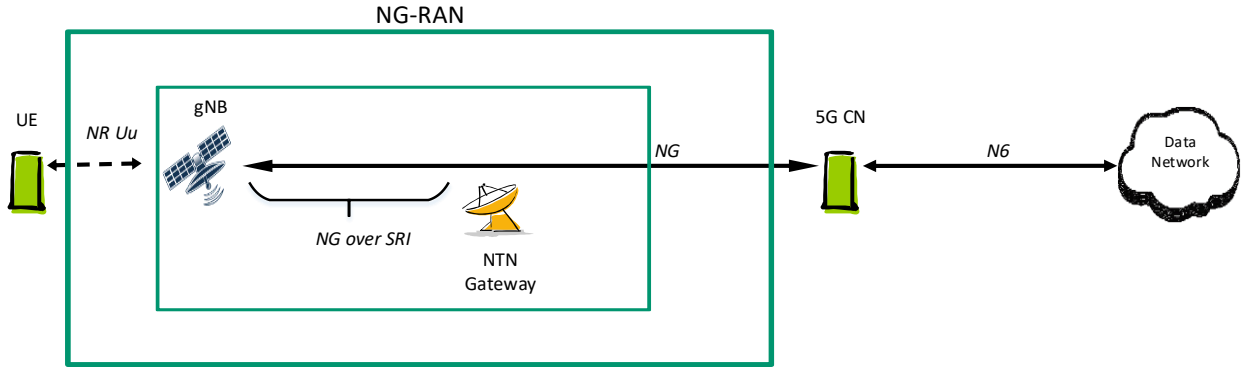

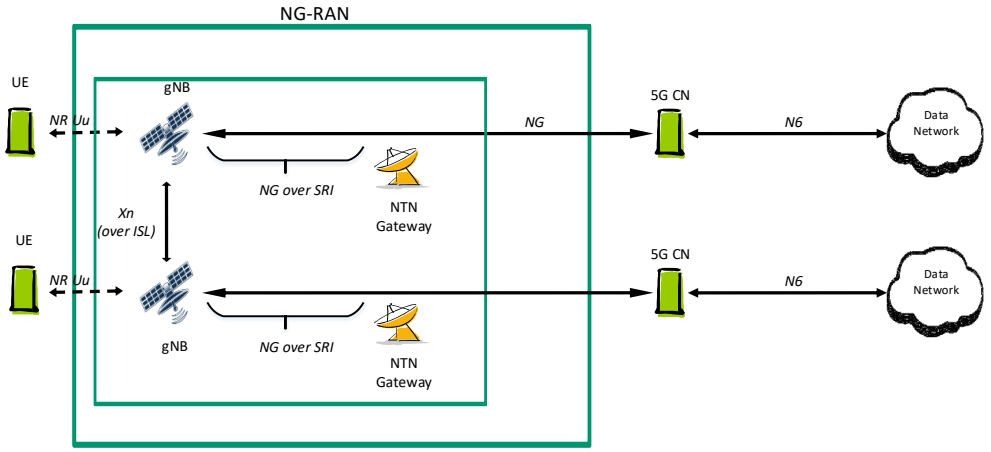

© NEC Corporation 2023

Further NR NTN enhancement in Rel-19 (3/3)

- **Enhanced GNSS Operation**
  - Motivation: NTN-based access can only be provided to UEs that have already acquired accurate GNSS location which limits the coverage of NTN to outdoor UEs
  - Objective:
    - Specify potential enhancements for the UE pre-compensation for UL time and frequency synchronization during long connection times in case GNSS availability and/or accuracy is reduced.

© NEC Corporation 2023

Objective summary for NR NTN evolution

- It is proposed to evolve NR NTN in Rel-19, focusing on the following aspects:
  - Study and specify DL coverage enhancement at least with link-level enhancement to particular physical channels
  - Specify UL capacity/throughput enhancement through spatial diversity and code domain multiplexing
  - Specify regenerative payload with full gNB on board
  - Specify GNSS enhancement for UE in connected mode when GNSS availability and accuracy is reduced

© NEC Corporation 2023

\Orchestrating a brighter world

NEC