CEWiT INDIA

3GPP TSG RAN Meeting #101
Bangalore, India, September 11-15, 2023

RP-232580

Network Energy Saving Enhancements

Agenda item: 8A.2.5

Sourced by: **CEWiT, IIT-K, IIT-H**, IIT-M

Motivation and state of art

- Adapting the gNB operation in various domains to reduce energy consumption
- Major motivation to reduce operational cost and environmental impacts
- Adaptation based on traffic condition, channel, UE feedback/assistance information etc.
  - To minimize impact on performance

- Rel. 18 SI focused on various techniques for energy saving in time, frequency, spatial and power domains and studied following aspects
  - Evaluation metric and KPI
  - Energy saving gains
  - Specification impact
  - Impact on legacy operation

- The outcome of the study is captured in TR 38.864

© CEWiT 2022

State of art cont'd…

- Rel. 18 WI focused on
  - Adaptation of DTX/DRX pattern for gNB (Technique A-4)
    - Configuration for DTX/DRX and activation/deactivation of DTX/DRX
    - Alignment with UE DRX cycle with DTX/DRX pattern
    - Impact of DTX/DRX pattern on various signals/channels and UE behavior for various conflicts
  - Adaptation of spatial elements: Port adaptation and TxRu adaptation (Technique C-1)
    - CSI-RS configuration for determining the adaptation pattern
    - Impacts on CSI-RS measurement and reporting configurations
    - Signaling spatial adaptation to UE and UE behavior
  - Power adaptation (Technique D-1)
    - Dynamic adaptation of PDSCH power
    - CSI-RS configuration for power adaptation
      - Impacts on CSI-RS measurement and reporting configurations
    - Signaling power adaptation to UE and UE behavior

© CEWiT 2022

NES Techniques for Rel. 19

Adaptation of TRP (Technique C-2)

- Adapt the number of TRPs transmitting and/or receiving signals and channels
  - Dynamic switching between single TRP and m-TRP operation
  - Based on TR 38.864
    - Substantial energy saving gain (up to 41%) is observed
    - No impact on legacy operation if adaptation is on a UE specific basis

- The WI phase should consider following aspects for efficient implementation of TRP adaptation
  - Enhancements for CSI framework to determine the pattern to adapt
  - Enhancements for m-TRP TCI and beam management framework
  - Impacts on repetition schemes/procedures
  - Signaling TRP adaptation to UE and defining UE behavior

© CEWiT 2022

On demand SSB (Technique A-5-2)

- NES techniques should be extended to common signals/channels
  - In NR, the transmission of common signals/channels is irrespective of load or network condition
    - reduces the inactive period at the gNB, resulting in high power consumption and limited energy saving
    - E.g., In Rel. 18 if SSB symbol overlaps with inactive period of DTX then gNB transmits SSB

- SSB/SIB1 transmission in the serving cell based on WUS
  - Enable longer inactivity period for cell, resulting in energy saving
    - Combining with DTX can improve energy saving further
    - Based on TR 38.864, significant energy saving (up to 22% without DTX configuration and 43.4% with DTX configuration) is observed
  - Discovery reference signal (DRS) to enable measurement and transmission of WUS by the UE
    - As a starting point RACH can be considered as the WUS

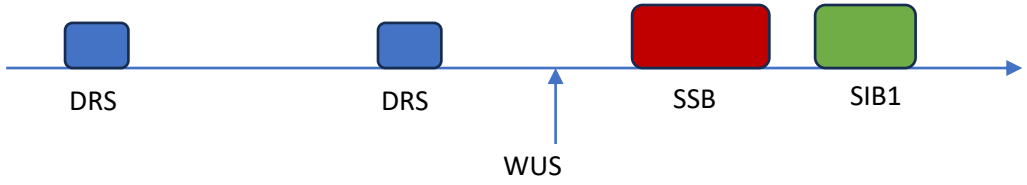

Fig. On demand SSB framework

© CEWiT 2022

On demand SSB (Technique A-5-2) cont'd…

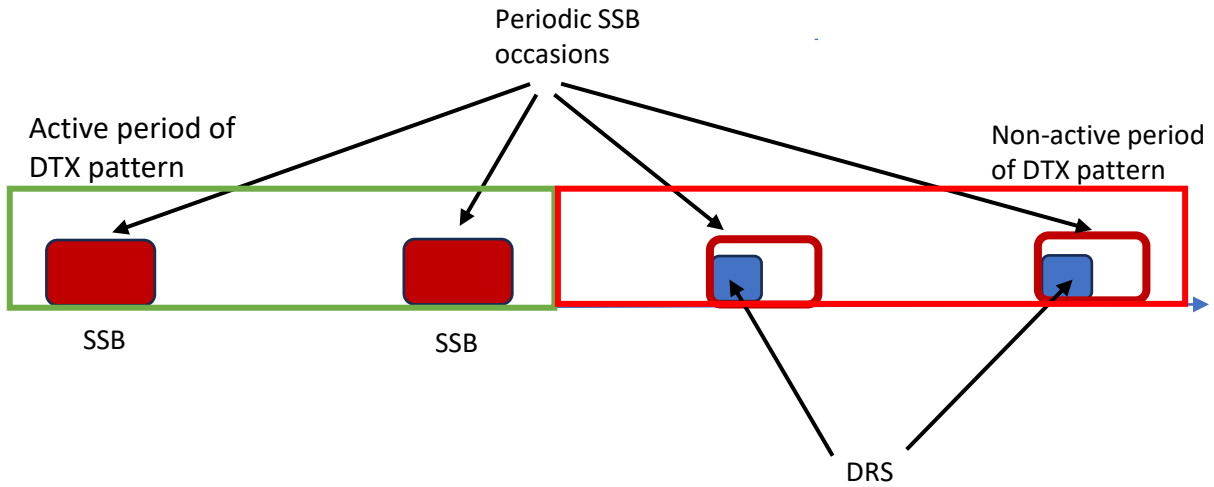

Fig. Multiplexing On demand SSB with DTX pattern

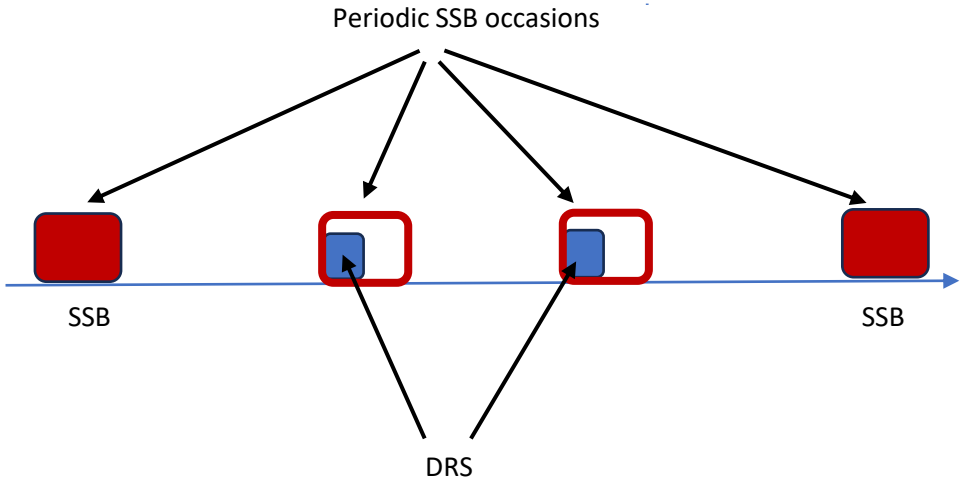

Fig. Multiplexing On demand SSB with legacy SSB

- The impact on legacy UE can be overcome/minimized by
  - Enabling the technique in a cell without legacy UEs
  - Increasing the periodicity of legacy SSB and multiplexing DRS with legacy SSB

© CEWiT 2022

On demand SSB (Technique A-5-2) cont'd…

- WI phase should consider following aspects for efficient implementation of on-demand SSB
  - Procedures for On-demand SSB
  - Design of DRS and signaling
  - Multiplexing On-demand SSB and DTX pattern

© CEWiT 2022

Remaining Issues from Rel-18 WI

- Further enhancements for Spatial/power domain adaptation
  - Rel-18 spatial/power adaptation applicable only for PDSCH
    - Measurements using CSI-RS/SSB may not be applicable for PDSCH
      - Adaptation changes beam characteristics and transmit power
      - Changes are not reflected in CSI-RS/SSB
    - TCI state and QCL relationship
      - Channel may vary dynamically for PDSCH
    - BFR procedure
      - Performance of the selected beam may not be the best for PDSCH
    - Frequent switching between symbols with/without CSI-RS

© CEWiT 2022

Remaining Issues from Rel-18 WI

- Rel-18 WI dropped enhancements for TCI configuration and BFR procedure due to time constraints

- Rel. 19 should consider the following
  - Impact of spatial adaptation on TCI state and related enhancements
  - Impact of spatial and power domain adaptations on BFR procedure and related enhancements
  - Extension of spatial/power adaptation to CSI-RS

© CEWiT 2022

Remaining Issues from Rel-18 WI cont'd…

- Enhancements to simplify CSI report framework
  - Rel-18 spatial and power adaptation increases UL resource consumption and UE power consumption
    - For adaptation, transmission of multiple CSI reports corresponding to various adaptation pattern is necessary
    - Increase the measurement complexity, CSI payload and reporting
  - Rel. 19 should focus on methods to simplify the CSI reporting framework for various adaptation patterns
    - Correlation among various CSI report quantities for various adaptations can be used for reducing the CSI payload
    - Rel-18 WI dropped enhancements for CSI report payload reduction due to time constraints.

© CEWiT 2022

Summary

Following NES techniques are supported for WI phase in Rel. 19

- Adaptation of TRP transmitting and/or receiving signals and channels
  - WI should focus on
    - Enhancements for CSI framework to determine the pattern to adapt
    - Enhancements for TCI and beam management framework for m-TRP
    - Impacts on repetition schemes/procedures
- On-demand SSB
  - WI should focus on
    - Behavior and procedures for On-demand SSB
    - Design of DRS for measurement and transmission of WUS
    - Multiplexing on demand SSB and DTX pattern
- Remaining items from Rel. 18
  - Impact of spatial adaptation on TCI state and related enhancements
  - Impact of spatial/power adaptation on beam failure recovery procedure
  - Extending the spatial/power adaptation to CSI-RS
  - Enhancements to simplify CSI report framework

© CEWiT 2022

Thank You

© CEWiT 2022