3GPP TSG RAN #101

Bangalore, India, September 11th – 15th 2023

RP-232562

Discussion on Rel-19 Duplex Evolution

Agenda Item: 8A.2.3

Source: Intel Corporation

Document for: Discussion

intel®

Background: Rel-18 SI on Duplex Evolution

- Partitioning of time resources into DL and UL in TDD leads to scheduling and resource allocation challenges towards achieving low latency, wide coverage, and system capacity
  - Study on simultaneous transmission (Tx) and reception (Rx) at the gNodeB within a TDD carrier based on Non-Overlapping Sub-Band Full Duplex (SBFD) operation
    - *"FDD in TDD": The first manifestation of Full Duplex operation in cellular systems*
- Dynamic/flexible TDD operations in NR systems remain challenging in practical networks due to inter-gNB and inter-UE CLI in co-channel and adjacent channel scenarios
  - Studies on further enhancements to CLI mitigation, including handling of both gNB-to-gNB CLI and UE-to-UE CLI
- Scope of the SI
  - For SBFD, full duplex operation is considered at gNB only.
  - Applicability: TDD bands across NR Frequency Ranges FR1 and FR2-1.

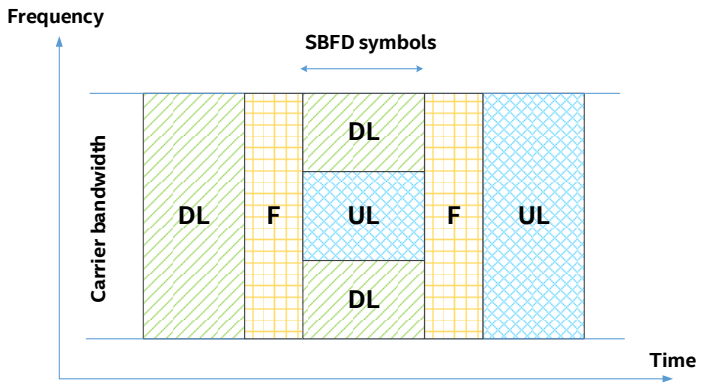

Non-Overlapping Subband Full Duplex

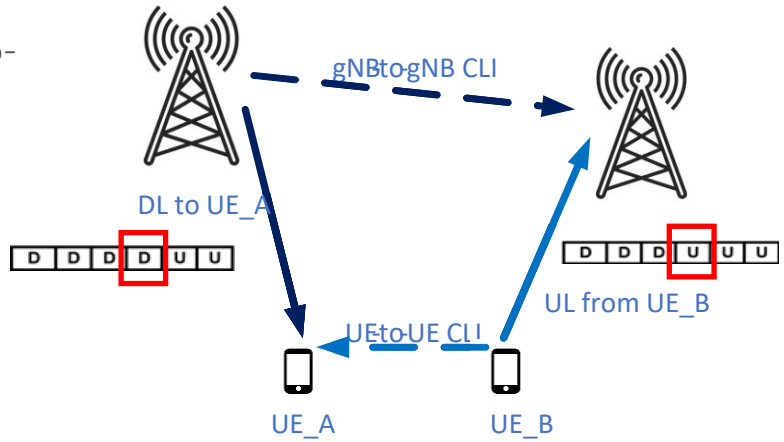

CLI in Dynamic/flexible TDD

Rel-18 studies on SBFD: Performance Evaluations

- Although RAN4 is yet to conclude its Rel-18 studies, the studies in RAN1 are completed

- From the evaluations and analyses reported in TR 38.358 so far, the following may be inferred:
  - Semi-static SBFD operation per deployment case 1 (single operator with aligned SBFD configuration across cells) can offer significant UPT gains for UL for most cases, especially for low-medium loads and may result in some UPT losses for DL in some cases, e.g., with large packets in Urban Macro (FR1) scenarios.
  - Semi-static SBFD operation may also lead to performance degradation if the resulting CLI is not managed appropriately, e.g., as evident from the losses incurred in case of HetNet (2-layer) scenarios with co-channel co-existence cases.
  - Semi-static SBFD operation can provide UL coverage gains compared to existing PUSCH coverage enhancement schemes like PUSCH repetitions or TBoMS with median gains of 5.4dB and 5dB respectively.
  - Compared to semi-static SBFD, dynamic SBFD operation provides positive gains in mean and 5%-ile UL UPT in some cases but suffers from losses or provides similar performance in others.

Rel-18 studies on SBFD: Operation Schemes

- RAN1 concluded SBFD operation Option 4 is feasible for RRC_CONNECTED state from the RAN1 specification perspective, where SBFD operation Option 4 assumes:
  - UE behaviors for non-SBFD aware UEs follow existing specifications
  - From RAN1 perspective, new UE behaviors can be introduced based on the time and frequency locations of subbands for SBFD operation known to SBFD aware UEs
- Non-SBFD aware UEs, including legacy UEs, and SBFD aware UEs can coexist in cells with SBFD operation at gNB side from RAN1 specification point of view.
- To support SBFD operation Option 4 for RRC_CONNECTED state, RAN1 identified the following potential specification impact for SBFD-aware UE:
  - Indication of time and frequency domain locations of SBFD subbands to UEs
  - UE transmission, reception and measurement behavior and procedures in SBFD symbols and/or non-SBFD symbols
- While the studies in Rel-18 were primarily limited to UEs in RRC_CONNECTED mode, the benefits of SBFD can be translated to UEs in RRC_IDLE/INACTIVE states at least for random access procedure, thereby improving control plane latency and coverage for Msg 1/MsgA transmissions
  - The primary challenge relates to inter-SB CLI due to uncertainty at gNB regarding UEs that may transmit Msg 1/ Msg A in UL
  - However, with proper beam coordination and power setting, the interference may be manageable, which can be further studied. Furthermore, PUSCHs or PUCCH during initial access in UL subband is still beneficial, e.g., Msg 3 PUSCH repetition in UL subbands in SBFD symbols, towards reducing control plane latency.

Rel-18 studies on CLI Mitigation: SBFD and Dynamic/Flexible TDD

- Various CLI mitigation schemes applicable to gNB-to-gNB CLI and/or UE-to-UE CLI for SBFD and/or dynamic/flexible TDD operations were studied by RAN1 in terms of performance benefits and analyses

- While the performance evaluation studies have not been particularly conclusive for most of the investigated CLI mitigation approaches, at least enhanced intra-cell inter-subband UE-to-UE CLI mitigation schemes like L1/L2 based UE-to-UE CLI measurement and reporting can be effective tools to enable efficient SBFD operations when compared against existing L3-based UE-to-UE CLI mitigation schemes.
  - L1/L2 based UE-to-UE CLI measurement can be optimized for short term interference measurement and low latency
  - L1/L2 based UE-to-UE CLI measurement and reporting can facilitate gNB adjusting UE scheduling for inter-UE CLI reduction

Duplex evolution in Rel-19: Motivation/Justification

- Normative specification work to support non-overlapped SBFD-based FD operation at gNB should be pursued in Rel-19 to realize potential UL UPT gains and UL coverage benefits in TDD systems.
- Normative specification work on L1/L2-based UE-to-UE CLI measurement and reporting at least for intra-cell inter-SB interference mitigation can serve as effective tools to realize efficient and practical SBFD operation.
- For a given NR carrier with SBFD operation, the specified solutions should ensure support of all UE types:
  - Pre-Rel-19 UEs ("legacy UEs")
  - Rel-19 SBFD aware UEs that support Rel-19 SBFD
  - Rel-19 UEs that do not support Rel-19 SBFD

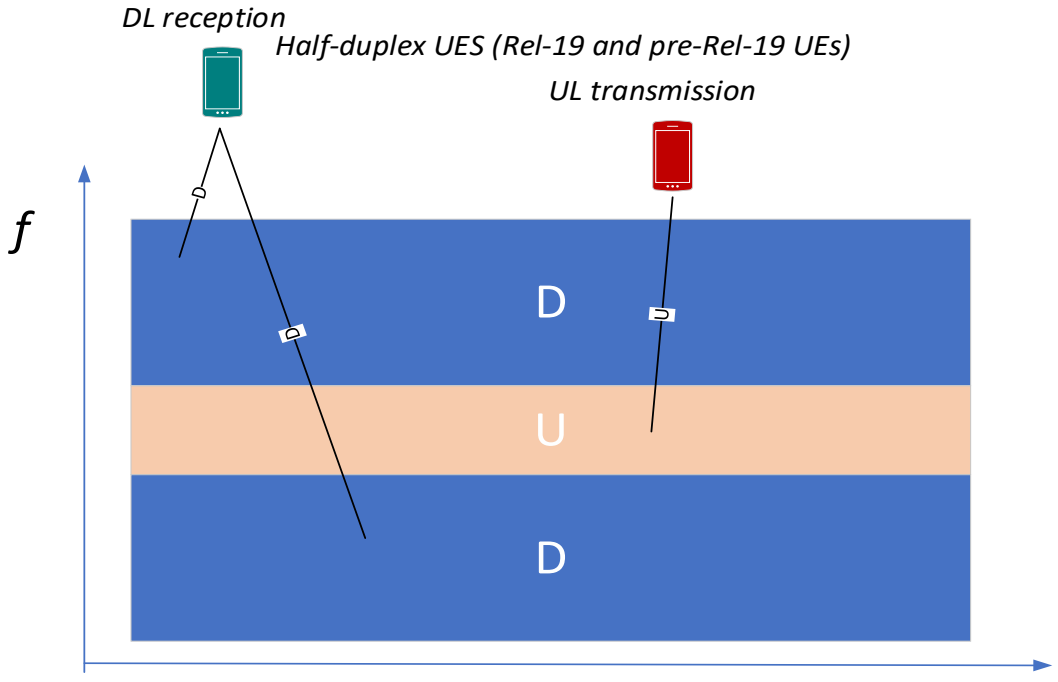

Non-overlapped Sub-Band Full Duplex at gNB

Duplex evolution in Rel-19: Potential Objectives

- Specify support of non-overlapped SBFD-based FD operation at gNB at least for UEs in RRC_CONNECTED mode [RAN1, RAN4, RAN2]
  - Specify solutions for at least semi-static indication of time and frequency domain locations of SBFD subbands to UEs [RAN1]
    - Study further and if beneficial specify solutions for dynamic indication of time locations of SBFD subbands to UEs
  - Specify solutions for UE behavior for transmission, reception and measurements and related procedures in SBFD symbols and/or non-SBFD symbols [RAN1]
  - Study further and if beneficial specify solutions for support of SBFD operation for Msg1/MsgA transmissions and PUSCH/PUCCH transmissions in UL SB scheduled by gNB, e.g., Msg3 PUSCH and PUCCH for Msg4 PDSCH during initial access [RAN1]
  - Specify corresponding performance requirements for UE and gNB [RAN4]
  - Specify higher layer signalling support for the corresponding solutions [RAN2]
- Specify solutions for UE-to-UE CLI measurement and reporting at least for intra-cell inter-SB interference mitigation for SBFD operations [RAN1, RAN4, RAN2]
  - Specify necessary enhancements to L3-based UE-to-UE CLI measurement and reporting for inter-cell inter-SB interference mitigation for SBFD operations [RAN1]
  - Study further and specify UE behavior and related procedures for either or both of L1- and L2-based UE-to-UE CLI measurement and reporting for inter-cell inter-SB interference mitigation for SBFD operations [RAN1]
  - Specify corresponding performance requirements [RAN4]
  - Specify higher layer signalling support for the corresponding solutions [RAN2]
- Note: For a given NR carrier with SBFD operation, the specified solutions should ensure support of all UE types: (a) Pre-Rel-19 UEs (“legacy UEs”), (b) Rel-19 SFBD aware UEs that support Rel-19 SBFD, (c) Rel-19 UEs that do not support Rel-19 SBFD

intel®