3GPP TSG RAN Meeting #101
Bangalore, India, September 11-15, 2023

RP-232297

Source: ZTE, Sanechips

Agenda: 8A.1

Overview of RAN Release 19

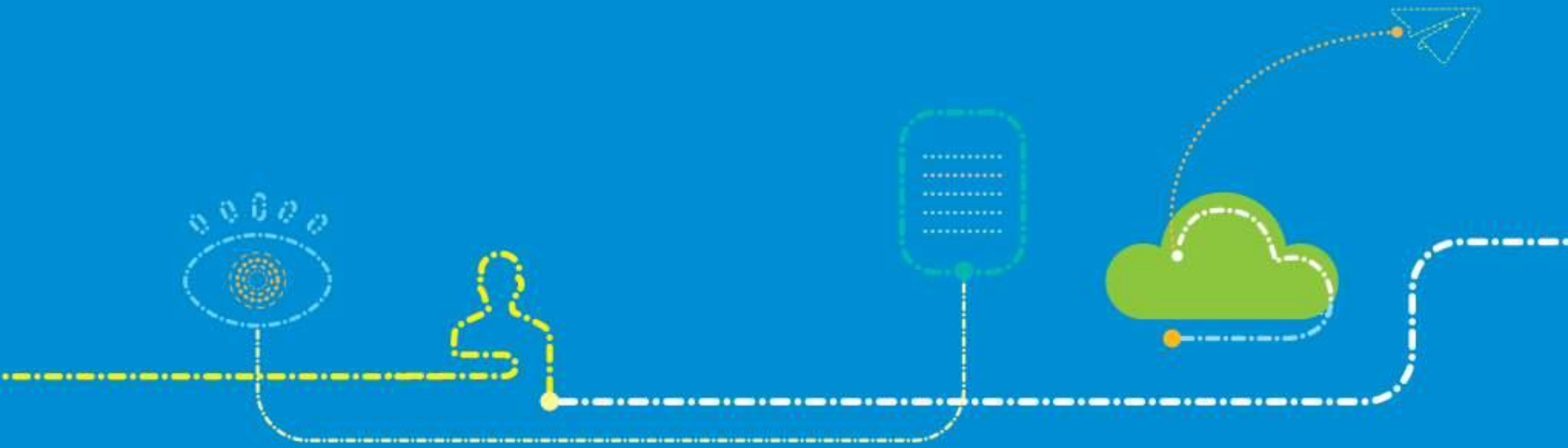

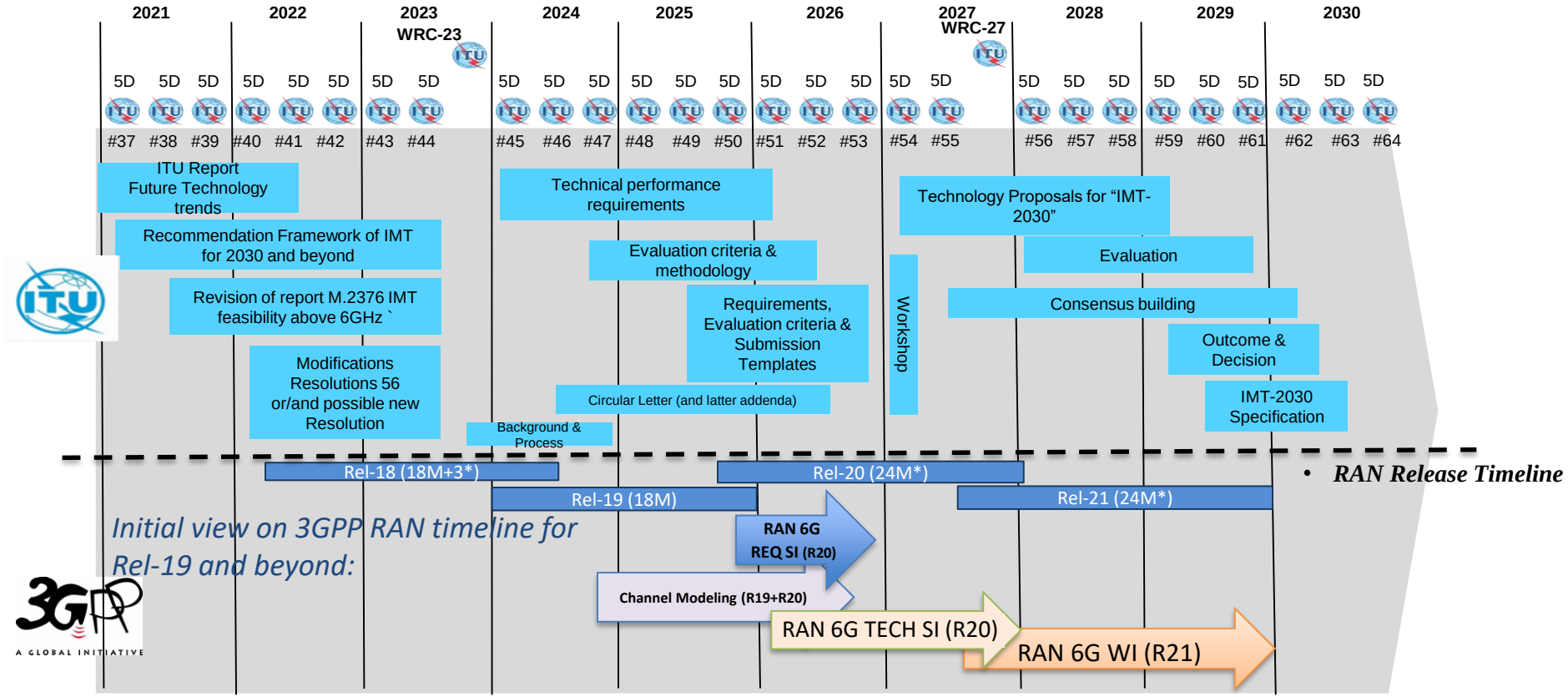

- *RAN Release Timeline*

- In Rel-19 RAN workshop, RAN Chairs summary of Rel-19 workshop[1] has been endorsed.
  - It is stated that Rel-19 will primarily focus on continuing investing in 5G Advanced commercial deployments.
  - Rel-19 can also serve as a bridge to 6G.
- In our view, it is more important at this stage to focus on providing standardization support to achieve successful commercialization of 5G-Advanced, including expanding new use cases or topics supported in 5G-Advanced.

[1] RWS-230488 RAN Chairs summary of Rel-19 workshop

© ZTE Corporation. All rights reserved

Categorization of Rel-19 RAN topics

- AI/ML Air Interface
- MIMO Evolution
- Duplex Evolution
- Ambient IoT
- Network Energy Saving Enhancements
- Mobility Enhancements
- NTN Evolution
- XR Evolution
- AI/ML for NG-RAN
- SON/MDT
- Channel Modeling (& possibly additional aspects e.g. for ISAC) for further evolution

Additional RAN1-led Candidate Topics

- LP-WUS/WUR
- Multi-carrier Enhancements
- Coverage Enhancements
- Positioning Enhancements
- SL Evolution

Additional RAN2-led Candidate Topics

- NCR
- SL Relay Enhancements
- UAV/UAM
- MU-SIM
- Broadcast/multicast
- UE aggregation, collaboration, and backup

Additional RAN3-led Candidate Topics

- Topological enhancements
  - IAB/WAB/Femto
  - E.g.., for public safety/emergency services
- QoE

Others

- Lean protocol stack/High speed packetization/Layer 2 UP enhancements
- RAN architectural enhancements/AS Security Enhancements
- Network/Outer coding
- RedCap Enh./High reliability and low complexity IoT
  - Combination w/ SL or NTN can be discussed in the SL/NTN topics, respectively)
- TaaS (Timing as a service)/High Accuracy Timing Service
- SDT enhancements
- LTE enhancements
- Dynamic UE capability update
- Others (e.g.,, Idle/Inactive enhancements, RAN slicing enhancements, etc.)

- The above categorization of topics is suggested in [1]. In this tdoc, we provide our overview of RAN Rel-19 topics including initial views on TU allocations and prioritization. Detailed views of each topic are provided in the tdocs with links in the following tables.

The first-category topics

Leading WG	The first-category topics	ZTE Tdoc	SI/WI (TU)
RAN1/RAN	Channel Modeling • ISAC (RAN-level study on use cases+RAN1-led Channel Model) • RIS and extreme massive MIMO channel model for new spectrum	RP-232153	SI (RAN1: 2, RAN: 1)
RAN1	AI/ML Air Interface	RP-232156	WI (RAN1: 3, RAN2: 1.5)
RAN1	Duplex Evolution	RP-232179	WI (RAN1: 2, RAN2: 0.5, RAN3: 0.5)
RAN1	MIMO Evolution	RP-232152	WI (RAN1: 2, RAN2: 0.5 for 3 meetings)
RAN1	Network Energy Savings	RP-232161	WI (RAN1: 2, RAN2: 1)
RAN1	Ambient IoT	RP-232160	SI (RAN1: 2.5, RAN2: 1.5, RAN3: 1)
RAN2	Mobility Enhancements	RP-232174	WI (RAN2: 2, RAN1: 1, RAN3: 0.5)
RAN2	NTN Evolution (including NTN-IoT)	RP-232154	WI (RAN2: 2, RAN1: 1)
RAN2/RAN3	XR Evolution (including Multi-modality)	RP-232162	WI (RAN2: 1.5, RAN3: 1.5, RAN1: 1)
RAN3	AI/ML for NG-RAN (including studies on both RAN3-led and RAN2-led use cases)	RP-232165	SI (RAN3: 2, RAN2: 1)
RAN3	SON/MDT	RP-232166	WI (RAN3: 1.5, RAN2: 1)

Additional topics and others

Leading WG	Additional Topics	ZTE Tdoc	SI/WI (TU)
RAN1	NCR (should be RAN1-led instead of RAN2-led)	RP-232155	WI (RAN1: 1, RAN2: 0.5)
RAN1	Multi-carrier Enhancements	RP-232180	WI (RAN1: 1, RAN2: 0.5)
RAN1	LP-WUS/WUR	RP-232163	WI (RAN1: 1, RAN2: 1)
RAN1	Coverage Enhancements	RP-232181	WI (RAN1: 0.5 or 1 if TDM, RAN2: 0.5)
RAN1	SL Evolution	RP-232172	WI (RAN1: 0.5 or 1 if TDM, RAN2: 0.5)
RAN2/RAN1	UE aggregation, collaboration, and backup	RP-232182	SI (RAN2: 1, RAN1: 1)
RAN2	SDT Enhancements	RP-232177	WI (RAN2: 0.5 for 6 meetings)
RAN2	Positioning Enhancements	RP-232151	WI (RAN2: 0.5, RAN3: 0.5)
RAN3	Topological enhancements – VMR	RP-232170	WI (RAN3: 1.5)

Leading WG	Other Topics
RAN1	High reliability and low complexity IoT (RP-232164), MBS(RP-232171)
RAN2	SL Relay (RP-232169), Lean protocol stack (for future release e.g. Rel-20) (RP-232178)
RAN3	Continuous Data Collection for AI/ML RAN (RP-232168), QoE (RP-232167)
RAN4	Views on Rel-19 RAN4-led topics (RP-232176)
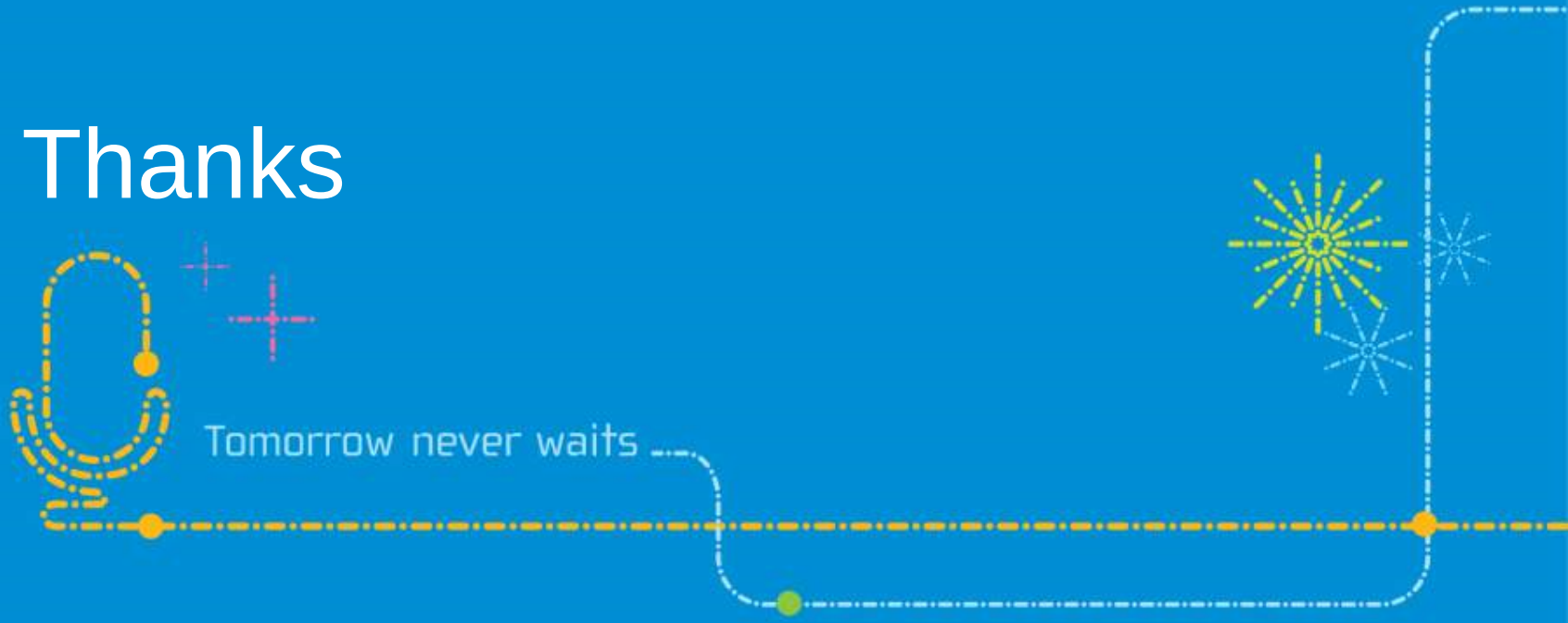
Thanks