3GPP TSG RAN Meeting #101
Bangalore, India, September 11-15, 2023

RP-232163

Source: ZTE, Sanechips

Agenda: 8A.2.12.1

Views on Rel-19 LP-WUS

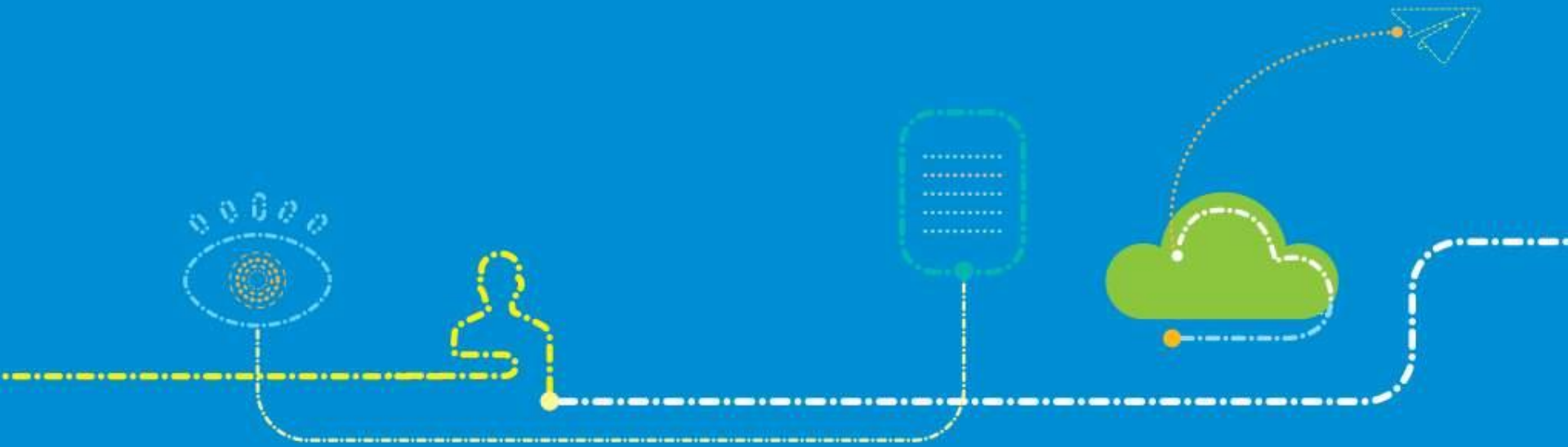

Background

- In RAN #94 meeting, new study item on low-power Wake-up Signal and Receiver for NR was approved in RP-213645 and the latest revision was updated in RP-222644.

- **Objectives in SI**

The study item includes the following objectives:

- Identify evaluation methodology (including the use cases) & KPIs [RAN1]
  - Primarily target low-power WUS/WUR for power-sensitive, small form-factor devices including IoT use cases (such as industrial sensors, controllers) and wearables
    - Other use cases are not precluded
- Study and evaluate low-power wake-up receiver architectures [RAN1, RAN4]
- Study and evaluate wake-up signal designs to support wake-up receivers [RAN1, RAN4]
- Study and evaluate L1 procedures and higher layer protocol changes needed to support the wake-up signals [RAN2, RAN1]
- Study potential UE power saving gains compared to the existing Rel-15/16/17 UE power saving mechanisms, the coverage availability, as well as latency impact of low-power WUR/WUS. System impact, such as network power consumption, coexistence with non-low-power-WUR UEs, network coverage/capacity/resource overhead should be included in the study [RAN1]
  - Note: The need for RAN2 evaluation will be triggered by RAN1 when necessary.

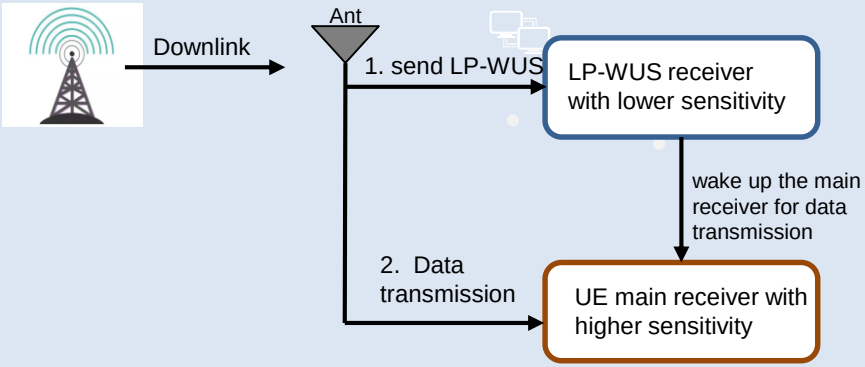

Figure 1. LP-WUS procedure

© ZTE Corporation. All rights reserved

Design target

Use cases:

- RedCap
  - IoT use cases, e.g., industrial wireless sensors, controllers,actuators
  - Wearables cases, e.g.,smart watches, rings, eHealth related devices and medical monitoring devices
- eMBB cases, e.g.,XR/smart glasses, smart phones
- Power-sensitive devices

Metrics and KPI:

- Power saving gain. Substantial gains compared to the existing Rel-15/16/17 UE power saving mechanisms
- Latency, UPT or capacity in connected mode
  - Latency for RRC CONNECTED mode can be up to tens of milliseconds, which is traffic dependent.
  - Latency for RRC IDLE/INACTIVE mode can be in the order of seconds for I-DRX use cases, and the latency can be larger for eDRX use cases.
  - Latency should be within 1s or 2s in some cases according to the SID.

Target coverage:

- Option #1: PDCCH for paging.
- Option #2: PUSCH for message3.

System impacts

- Controlable/configurable by network
- Minimize the impacts on existing NW implementation

© ZTE Corporation. All rights reserved

Power saving gain for RRC connected mode

For XR traffic:

- For DL only XR traffic in low/high load, compared with R17 PDCCH skipping, SSSG switching, R18 enhanced DRX, R15 short CDRX, LP-WUS can provide 11% (micro sleep) ~20%(light sleep) power saving gain.
- **The WUR-on power is no more than 4.**
- The impact on the XR capacity is marginal for low load scenarios. For high load scenarios, the impact to the XR capacity is also marginal when the UE MR enters the micro sleep state and relatively larger when MR enters the light sleep state during LR LP-WUS monitoring.

For FTP3 traffic:

- When MR is allowed to enter in deep-sleep state during LP-WUS monitoring, compared with CDRX or CDRX+DCP,
  - LP-WUS can provide average power saving gain 61.3% when WUR ON power setting is NO more than 4units,
  - LP-WUS can provide average power saving gain 40.25% when WUR ON power setting is equal to 10units
  - The average UPT gain is [10.75%, 152%] when MR is allowed to enter in deep-sleep state, light sleep, micro sleep during LP-WUS monitoring

- When MR is allowed to enter in deep-sleep state during LP-WUS monitoring, compared with R17 PDCCH + CDRX+ DCP,
  - LP-WUS can provide average power saving gain 53% when WUR ON power setting is NO more than 4units.
  - LP-WUS can provide average power saving gain 33% [Note1] when WUR ON power setting is equal to 10units
  - The average UPT gain is [-4%,128%] when MR is allowed to enter in deep-sleep state, light sleep, micro sleep during LP-WUS monitoring

For IM traffic, power saving gain and UPT gain can also be observed [Note1].

Observation: Significant power saving gain(PSG) and UPT gain can be obtained via LP-WUS in connected mode. The PSG from the WUR with on power no more than 4 is 1.5 times than that from WUR with on power no less than 10.

Note 1: the number of sources is 1.

Power saving gain for RRC idle/inactive mode

- For continuous LP-WUS monitoring, UE power saving gain is only observed if the relative power consumption of LP-WUR ON for LP-WUS monitoring is lower, e.g. no larger than 1 unit.
- For duty-cycled LP-WUS monitoring and same duty ratio, higher power saving gain is observed if the relative power consumption of LP-WUR ON for LP-WUS monitoring is lower.
    - For different WUR-on power values, the power saving gain is shown as below [Note 2]

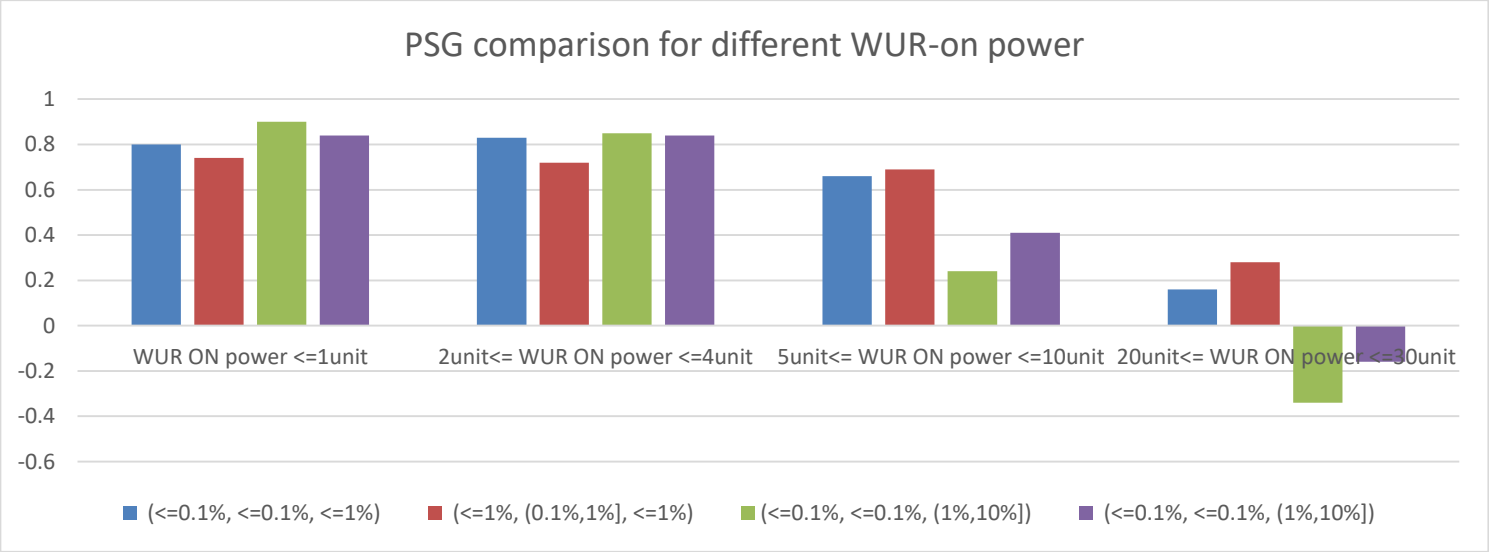

Observation:

- **Large power consumption (i.e., even negative PSG) with WUR-on power >= 20 is unacceptable.**
- **The PSG from WUR-on power <=4 is up to 3.75 times (90%/24%) than that from WUR-on power 5~10.**

Note 2:data from 8.1.1.3.2 observation

Latency for RRC idle/inactive mode

- For DRX and eDRX, compared with legacy DRX or eDRX, the increased latency of LP-WUS is shown as below.

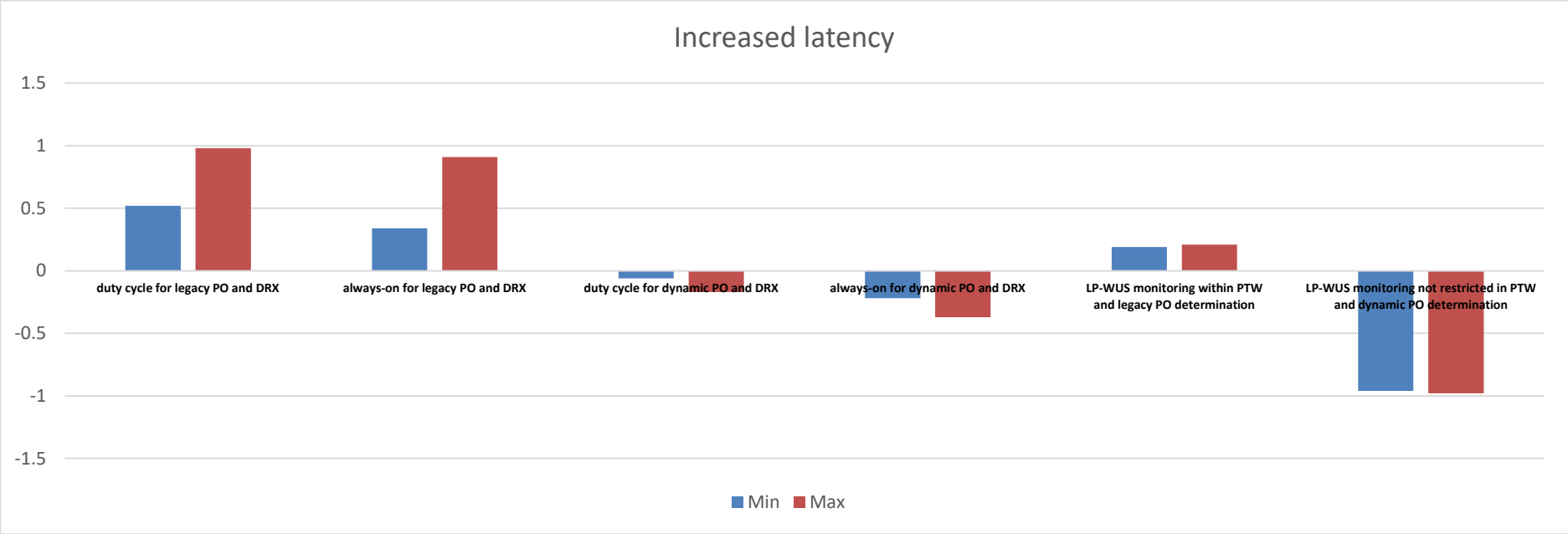

Observation: For idle/inactive mode,

- **Always-on monitoring can help reduce latency.**
- **Dynamic PO can reduce latency significantly，up to around 97% latency decrease for eDRX, and the latency is less than 1s which satisfies the requirement of fireshutters scenario in the SID. Without dynamic PO, the latency may be increased.**
- **Initiating PRACH directly after wake-up has lower latency than monitoring dynamic PO**

LLS performance

- **Coverage**
  - LP-WUS can achieve comparable MIL performance with that of NR PUSCH MSG3. It is more challenging for LP-WUS to reach comparable MIL as legacy PDCCH with AL16/AL8.
  - For Rural scenarios and single PUSCH MSG3 transmission, it is concluded OOK-based LP-WUS and OFDMA based WUS have similar required resource. For Urban scenario and single PUSCH MSG3 transmission, if the maximum value is excluded, actually, same conclusion can be made.
- **Timing error**
  - OOK waveform can have perfect timing error tolerance by using sliding window detection with acceptable power consumption increase.
    - e.g., WUR-on power is 0.5 or 0.1, if BB part contributes 20%, sliding detection with 10 attemps may increase the WUR-on power to1.5 or 0.3
  - OFDMA waveform have perfect timing error tolerance by using sliding window detection,but results in significant the power consumption increase
    - e.g., WUR-on is 10 or 4, if BB part contributes 20%, sliding detection with 10 attemps may increase the WUR-on power to 30/12
- **Frequency error**
  - OOK (except OOK3) waveform is more robust to frequency error than OFDMA waveform
    - e.g., OOK4 M=4 is tolerant to up to 800KHz(30ppm>maximum frequency error of RTC), OFDMA is tolerant to up to 26KHz(10ppm)
- **Spectrum efficiency**
  - for SNR range of [-3,3] dB, OOK-4 M>4 = OFDMA(0.15b/s/Hz) > OOK-4 M=4(0.10b/s/Hz)
  - for SNR range of [3,9] dB, OOK-4 M>4 = OFDMA(0.15b/s/Hz) > OOK-4 M=4(0.10b/s/Hz)
  - a typical NR spectrum efficiency is 10b/s/Hz for dense urban city. Compared with NR, the SE difference between OOK and OFDMA is negligible.
- **RRM measurement: RSRP accuracy**
  - for OOK based measurement [3 sources], at SNR=-9, in AWGN, to achieve 90 % accuracy of measurement +-Y<=3dB, <=10 OFDMA symbols over 1-3 periods are sufficient
  - for OOK based measurement [2 sources], at SNR=-3, in TDL-C, to achieve 90 % accuracy of measurement +-Y<=3dB, less than 10 symbols spreading over 1-2 periods is sufficient.
  - for OOK based measurement [3 source], at SNR=-6, in TDL-C, to achieve 90 % accuracy of measurement +-Y<=3dB, 11-70 symbols spreading over at least 1 period is sufficient

Observation:

- **OOK is more robust to timing and frequency error, which requires less frequent synchronization and can achieve more PSG.**
- **To achieve the same coverage, OOK-based LP-WUS and OFDMA based WUS have similar resource requirements.**
- **For spectrum efficiency, compared with NR system, the spectrum efficiency difference between OOK and OFDMA is negligible.**
- **For RSRP accuracy, OOK based waveform also can achieve the RAN4 requirements with acceptable overhead.**

System impacts

- **NW power consumption**
  - When 320ms LP-SS periodicity, 4 or 8 beams and no more than 14 symbols LP-SS duration is assumed, the additional increased network power consumption ratio is marginal (0.06%~3.9%), (0.07%~2.716%), (0.388%~1.076%) for zero load, low load and medium load, respectively
  - Lower impact to the network power consumption is expected when LP-SS is transmitted FDM with NR SSB/SIB-1. Also, different configuration for LP-SS, e.g., periodicity, beams, number of symbols may impact the NW power consumption.
- **System overhead**
  - For OOK based LP-SS with 5MHz, 8 beams and 20MHz system bandwidth,
    - the overhead is 0.4% for 320ms LP-SS periodicity, and 1 slot (30kHz) duration per beam
    - the overhead is 0.3% for 1280ms LP-SS periodicity and 3 slots (30KHz) duration per beam.
  - The overhead of other configurations can be derived by scaling accordingly
  - For OOK based LP-WUS carrying information up to 24bit, the overhead is marginal (up to 1.98%) for 20MHz
  - The overhead can be controlable/configurable, since the gNB can control the number of UEs to wake-up via threshold configuration or UE specific wake-up.
- **Co-existence**
  - LP-WUS can be flexibly configured within a carrier, which is beneficial to be multiplexed with other NR signals and channels.

Observation: System impacts introduced by OOK waveform is controlable/configurable by network.

Potential WI scope

Justification

- Support the RedCap and eMBB use cases
  - RedCap including eRedCap
    - IoT use cases, e.g., industrial wireless sensors, controllers,actuators
    - Wearables cases, e.g.,smart watches, rings, eHealth related devices and medical monitoring devices
  - eMBB cases, e.g.,XR/smart glasses, smart phones
- Deployment scenario for LP-WUS/WUR includes at least FR1 band
- Aim for substantial power saving gain and lower latency to serve the use cases mentioned above.

Potential objectives

- Specify OOK waveform based LP-WUS [RAN1,RAN2,RAN4]
  - Structure of LP-WUS
  - Waveform, bandwidth, SCS of LP-WUS
  - Carried information for UE specific wake-up, group specifc wake-up
- Specify related LP-WUS procedures [RAN1,RAN2,RAN3,RAN4]
  - Specify L1/L2 related procedures for LP-WUS, including at least
    - LP-WUS activation/de-activation
    - LP-WUS monitoring behaviors, always-on monitoring and duty cycle monitoring
    - Main receiver behaviors after LP-WUS is detected
  - Specify at least serving cell RRM measurement relaxation and RRM measurement offloading to LP-WUR, including
    - RRM measurement metrics
    - Reference signal for WUR measurement/synchronization
- Note: The impacts on legacy network and UEs should be minimized.

© ZTE Corporation. All rights reserved

Thank You!