3GPP TSG RAN#101
Bangalore, September 11-15, 2023

RP-232026

Discussion on Ambient IoT

Agenda: 9.2.2
Source: Samsung
Document for : Discussion and decision

SAMSUNG

Overall progress for RAN SI for ambient IoT

The progress of RAN SI for ambient IoT

	Status in RAN#99 and 100	Expected in RAN#101	Expected in RAN#102
Identify the suitable deployment scenarios and their characteristics, at least for the use cases/services agreed in SA1	Identified use cases, scenarios and topologies. Characterized scenarios	Characterized remaining scenarios and refinement for use cases. Identify device types.	
Formulate a set of RAN design targets based on the identified deployment scenarios and their characteristics for the relevant use cases, at least including (Power consumption, Complexity, Coverage, Data rate, Positioning accuracy)		Complete RAN design targets	Refinement for RAN design targets
Compare and assess the feasibility of meeting the design targets for relevant use case on the basis of the deployment scenario(s) appropriate to it, and identify assumptions on required functionality to be supported.		Identify required comparison and assessment based on RAN design targets	Collecting assessment and draw observations and conclusion

Proposal 1: We suggest to continue study until Dec 2023

SAMSUNG

Topology

- **Topology(1)~(4) have been agreed in RAN 98-e, which described the connectivity (information exchange) between BS, Ambient IoT device, and assisting node.**
  - Topology (1): BS <-> Ambient IoT device
    - NOTE 1: Includes the possibility of BS Rx and BS Tx in different BSs
  - Topology (2): BS <-> intermediate node <-> Ambient IoT device
    - NOTE 1: Intermediate node can be relay, IAB, UE, repeater, etc. which is capable of ambient IoT
  - Topology (3): BS <-> assisting node <-> Ambient IoT device <-> BS
    - NOTE 1: Assisting node can be relay, IAB, UE, repeater, etc. which is capable of ambient IoT
    - FFS: If the two BS can be different
  - Topology (4): UE <-> Ambient IoT device

- There is no clear definition <u>on the carrier wave node</u>, and whether the carrier wave node also supports communication functionality.
  - The location of carrier wave node may lead to different observation on deployment scenarios, applicability of use cases, feasibility. For example, interference level for UL signal reception may be different depending on whether the carrier wave node also receive UL signal or not.

Proposal 2: Clarify the carrier wave node in topology.

SAMSUNG

Device categorization

Considering lack of feasibility of storage capacity in tag-like devices, we suggest not to define exact values for E1 and E2 in storage capacity, and other details

Proposal 3: due to lack of feasibility study, consider exact values and details of device architecture in WG-level study and more focus on RAN design target first

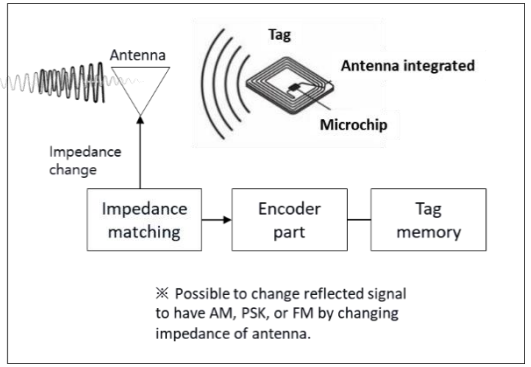

Device type A

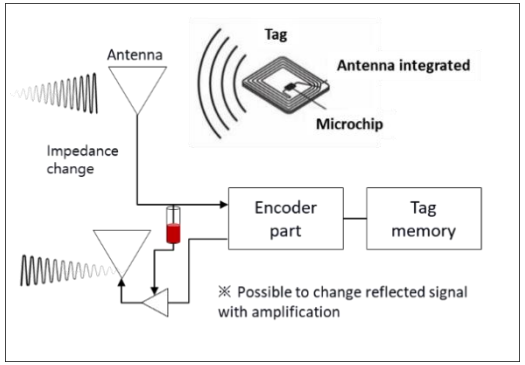

Device type B

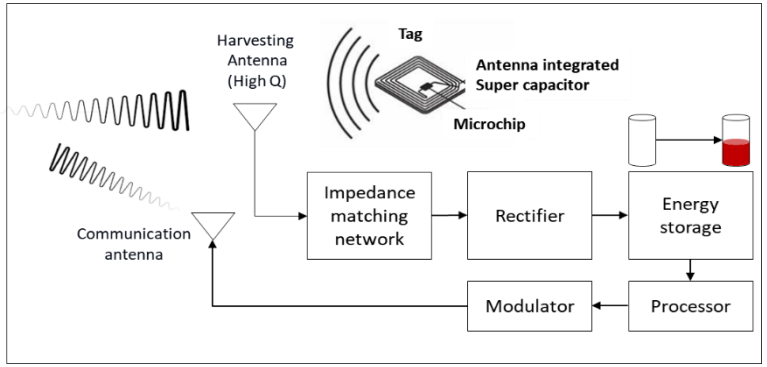

Device type C

SAMSUNG

RAN design target

According to the study results of SA, requirements are summarized for several use cases. However, in RAN perspective, we propose to define

Proposal 4: for RAN design targets

- Coverage
  - 10 m for typical indoor, 30 m for factory indoor or small cell outdoor, and 100m for micro outdoor
- Positioning Accuracy
  - <1m for indoor, <3m for outdoor
- Latency
  - 2s for indoor, 5s for outdoor
- Density
  - 100 devices per indoor cell, 1000O devices per outdoor cell
- Receiver sensitivity
  - -20 dBm for type A, -40 dBm for type B, -60 dBm for mid-range type C, -90 dBm for long-range type C

SAMSUNG

Necessary study aspects

For WG-level study, the followings are considered in the scope

- UE architecture for device A, B, and C
- Modelling of harvesting efficiency, charging time, reflection efficiency, power gain
- RF complexity aspect for FDD and TDD ambient IoT devices
- Design of harvesting signals in DL and feasibility of reusing the legacy signal as harvest
- Design of physical-layer UL signal for ambient IoT packet
- Coexistence with other legacy systems and devices
- Evaluation of performance considering ambient IoT modelling
- Study on identification and management of ambient IoT devices