紫光展锐 UNISOC

3GPP TSG RAN Meeting #101 **RP-231911**

Bangalore, India, September 11th – 15th, 2023

Agenda Item: 8A.2.12.1

Source: Spreadtrum Communications

Title: LP-WUS in Rel-19

Document for: Discussion and decision

Background

R18 LP-WUS SI

- Completed in Sep. 2023 => outcome TR 38.869

Power model for LR

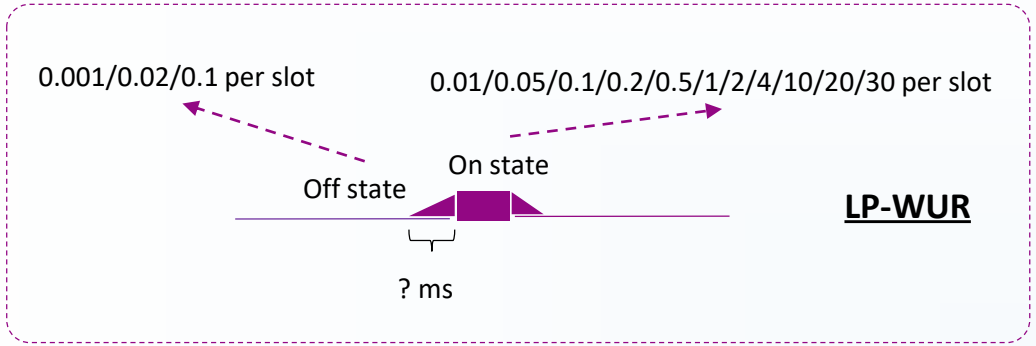

Power model for ultra-deep-sleep for MR

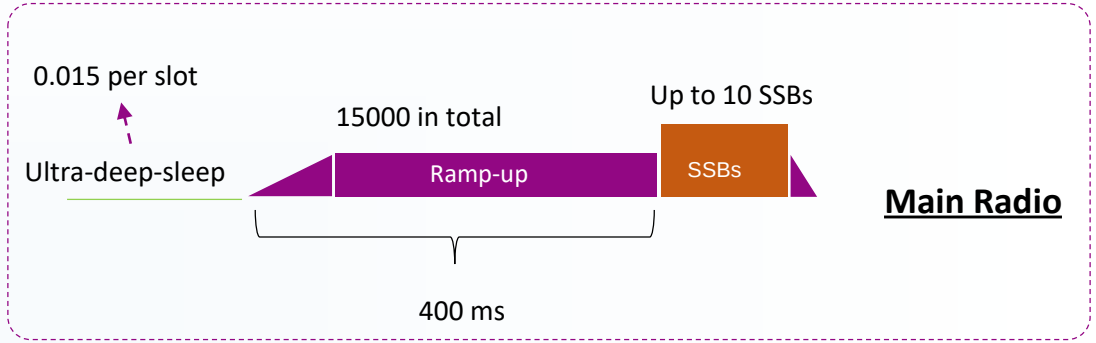

Example of power consumption for RRC IDLE/INACTIVE state

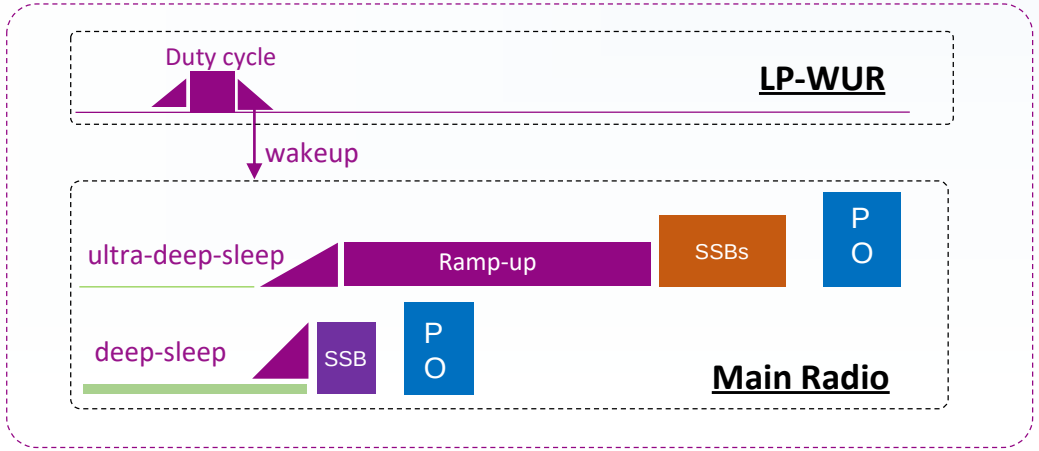

Example of power consumption for RRC CONNECTED state

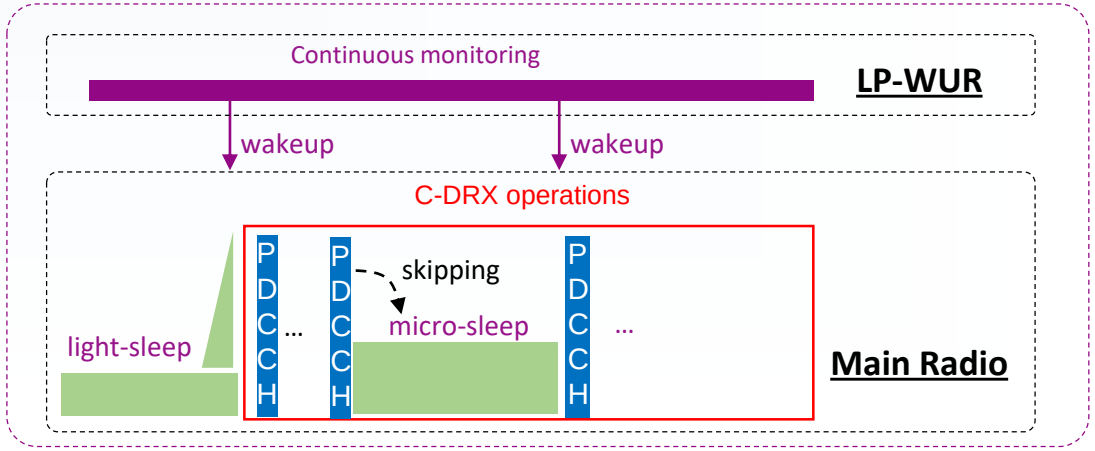

KPIs (1/2)

KPIs for UE in RRC IDLE/INACTIVE state

Power saving gain

- Power saving gain is significant compared to R17 PEI solution in our evaluation for both ultra-deep-sleep and deep-sleep
- Power saving gain mainly comes from
  - RRM measurement relaxation of MR
  - Time/frequency-error tolerance of LR (i.e. reception with presence of large time/frequency error)
  - 1 Rx of LR
  - Low power consumption of processing in LR than that of MR, e.g. without FFT/equalizer/decoder and other modules

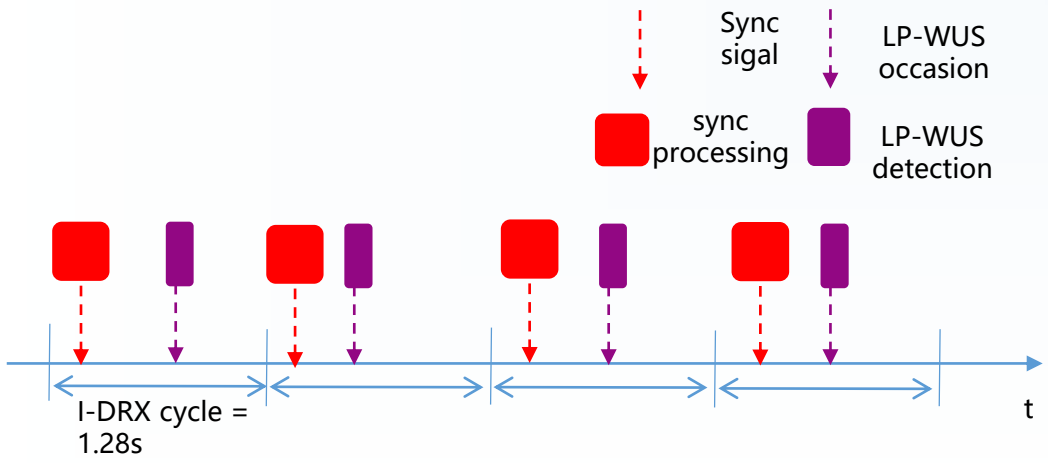

Note: Usually, periodicity of LP-WUS occasion is assumed same as I-DRX, periodicity of sync signal is smaller than I-DRX

Latency

- Latency is slightly larger than that of legacy paging for normal I-DRX, since PO should be monitored in general cases

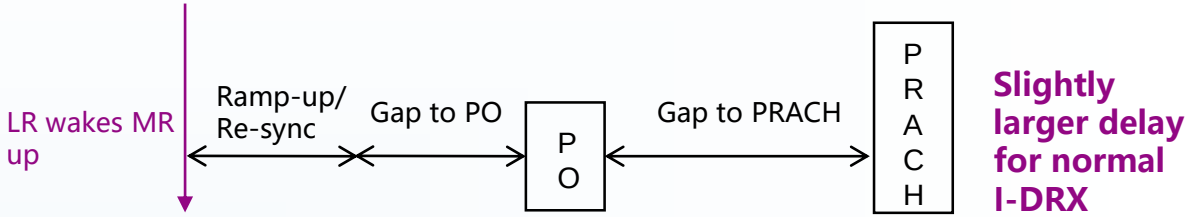

Coverage target

- Discontinuous coverage: PUSCH for Msg.3
- Continuous coverage: Paging PDCCH
  - Need coverage enhancement

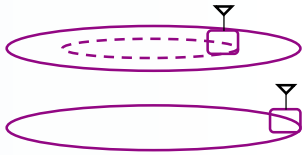

System overhead

- System overhead depends on coverage target and LP-WUR complexity
- LP-WUS can replace DCI format 2_7 (PEI)

Observation 1: Power saving gain is promising in RRC IDLE/INACTIVE state, at least for normal I-DRX

KPIs (2/2)

紫光展锐 UNISOC

◻ KPIs for UE in RRC CONNECTED state

Power saving gain

- Power saving gain may come from
  - PDCCH monitoring reduction at MR through real-time wakeup due to monitoring with dense duty cycle
- May be sensitive to power consumption for LR on state due to monitoring with dense duty cycle

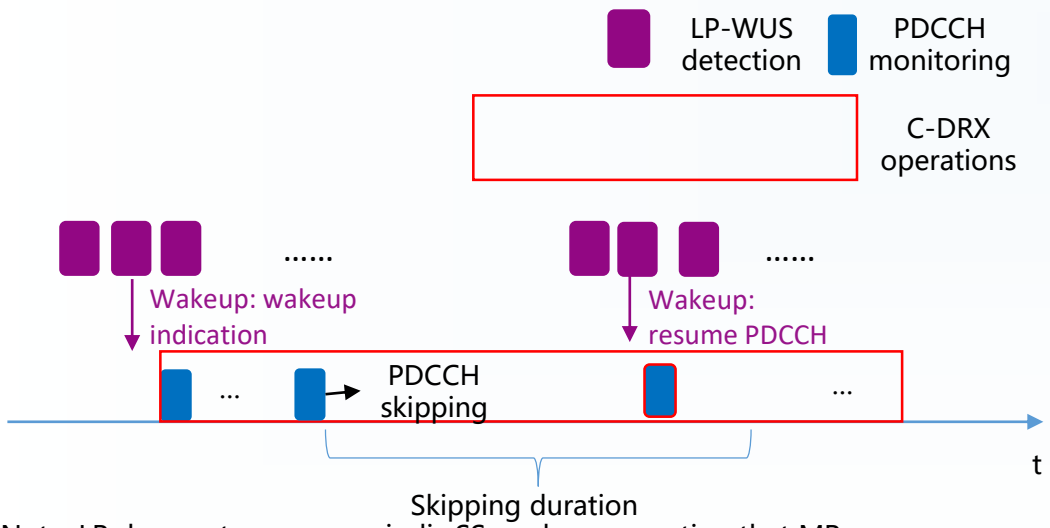

Note: LR does not process periodic SS, under assumption that MR provides sync to LR

Latency

- Latency is smaller than that of R16/17 PDCCH adaptation and WUS for C-DRX due to monitoring with dense duty cycle

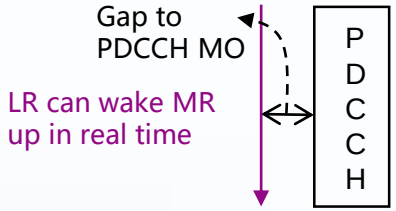

Coverage target

- Discontinuous coverage: PUSCH for Msg.3
- Continuous coverage: Paging PDCCH
  - Need coverage enhancement

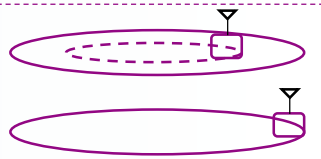

System overhead

- System overhead depends on target coverage and LP-WUR complexity
  - High-precise sync can be provided by MR
- LP-WUS can replace DCI

Observation 2: Power saving gain and/or latency reduction (UPT improvement) can be achieved in RRC CONNECTED state

R19 LP-WUS WI Objectives

- **LP-WUS physical design (RAN1)**
  - Waveform is based on OOK-1/4
  - OFDM symbol generation at transmitter
    - OOK-1: subcarrier modulation and mapping for 1 bit
    - OOK-4: subcarrier modulation and mapping for M bits (M>=2)
      - Transform precoding may or may not specified
  - Manchester code
    - OOK-1: code length is 2
    - OOK-4: code length is less than or equal to 2M
  - CRC is configurable
    - If information is carried by bit sequence there is no CRC
    - Otherwise, there is CRC
  - Predefined reference signal (e.g. preamble) can be configured in LP-WUS
- **Synchronization/RRM measurement (RAN4, RAN1)**
  - Offloading synchronization/RRM measurement to LR in idle/inactive state
  - Legacy SSB or LP-SS
- **LP-WUS physical procedures (RAN1, RAN2)**
  - Duty cycle is baseline
- **High layer procedures for LP-WUS (RAN2, RAN3, RAN1)**
- **Note: Strive common design for idle/inactive and connected states**

Illustration of frequency locations

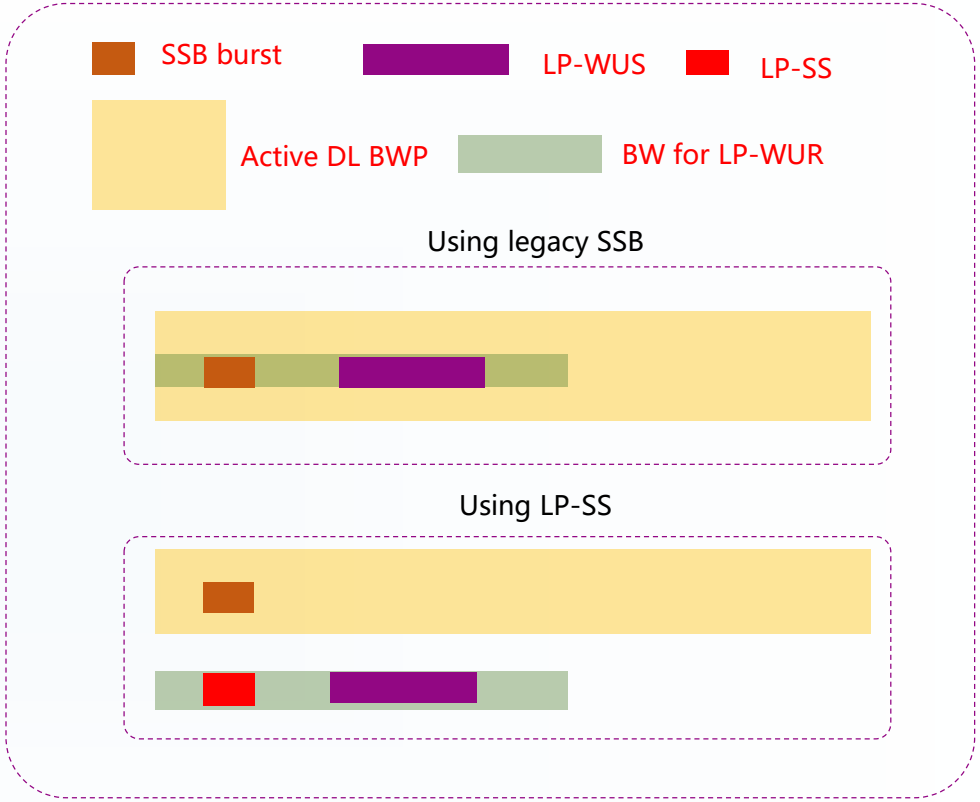

Thanks

紫光展锐
UNISOC