3GPP TSG RAN Meeting #101
Bangalore, India, September 11 – 15, 2023
Agenda Item: 8A.2.2

RP-231601

Discussion of R19 Work on MIMO Evolution

Futurewei Technologies, Inc.

FUTUREWEI Technologies

Overview of MIMO in RAN R19 Workshop

- In RAN R19 workshop held in June, about 41 companies proposed some MIMO related work for R19
  - Among them, 25 companies submitted separate contributions on R19 MIMO
  - The rest included views on MIMO in their high-level overview contributions
- Overall, companies made a wide scope of proposals with some common features
  - CSI enhancements with >32 (64/128) CSI-RS ports
  - Beam management enhancements
  - Cooperative MIMO with non-ideal backhaul and impairments
  - UL STxMP enhancements to support simultaneous PUCCH + PUSCH, and M-DCI PUCCH+PUCCH (Rel-18 leftover)

CSI Enhancements with >32 CSI-RS Ports

- Motivation mentioned by proponents
  - Many operators are deploying 64TRx radio now. Observed/expected 20% - 30% performance gain with 64TRX.
  - For FDD and TDD with limited UE UL SRS coverage, need > 32 CSI-RS ports to take full advantage of 64TRX
- Possible enhancements
  - Extend the number of CSI-RS ports (e.g., to 64 ports) without extra frequency-time resource
  - Codebook enhancement for higher number of antenna ports, e.g., to support higher number of N2 (number of cross-polarization antenna rows on vertical direction)
- Views
  - We are supportive of this item given the use case/benefit are justified

Table 5.2.2.2.1-2: Supported configurations of (N_1, N_2) and (O_1, O_2)

Number of CSI-RS antenna ports, $P_{\text{CSI-RS}}$	(N_1, N_2)	(O_1, O_2)
4	(2,1)	(4,1)
8	(2,2)	(4,4)
	(4,1)	(4,1)
12	(3,2)	(4,4)
	(6,1)	(4,1)
16	(4,2)	(4,4)
	(8,1)	(4,1)
24	(4,3)	(4,4)
	(6,2)	(4,4)
	(12,1)	(4,1)
32	(4,4)	(4,4)
	(8,2)	(4,4)
	(16,1)	(4,1)

BM Enhancements

- Motivation mentioned by proponents
  - Hybrid beamforming with small number of digital chains and corresponding BM procedure (beam sweeping through P1, P2, and P3, and reporting) is slow with high overhead and results in frequent beam failure events.
  - Enhancements in R17/18 on beam indication does not solve the fundamental issue. What AI/ML-based algorithm can do is also limited.
- Possible enhancements
  - As a small enhancement, UE initiated operation to reduce latency and overhead since UE has better view on beam qualities for timely beam selection/switching
  - As a major enhancement, study and introduce new antenna architecture for very fast BM, for example, by taking advantage of analog/hybrid antenna architecture and the all-digital antenna architecture for one shot beam acquisition
- Views
  - We are supportive of this item as it is critical to better utilize high frequency spectrum

Fast BM Enhancements: New Antenna Architecture

- A new antenna architecture with two parts is proposed to take advantage of analog/hybrid antenna architecture and the all-digital antenna architecture for very fast BM:
  - A low-resolution digital array only for the receiver adds to an analog/hybrid array with a small number of high-resolution digital chains for both transmitter and receiver. The two arrays can share antenna panels.

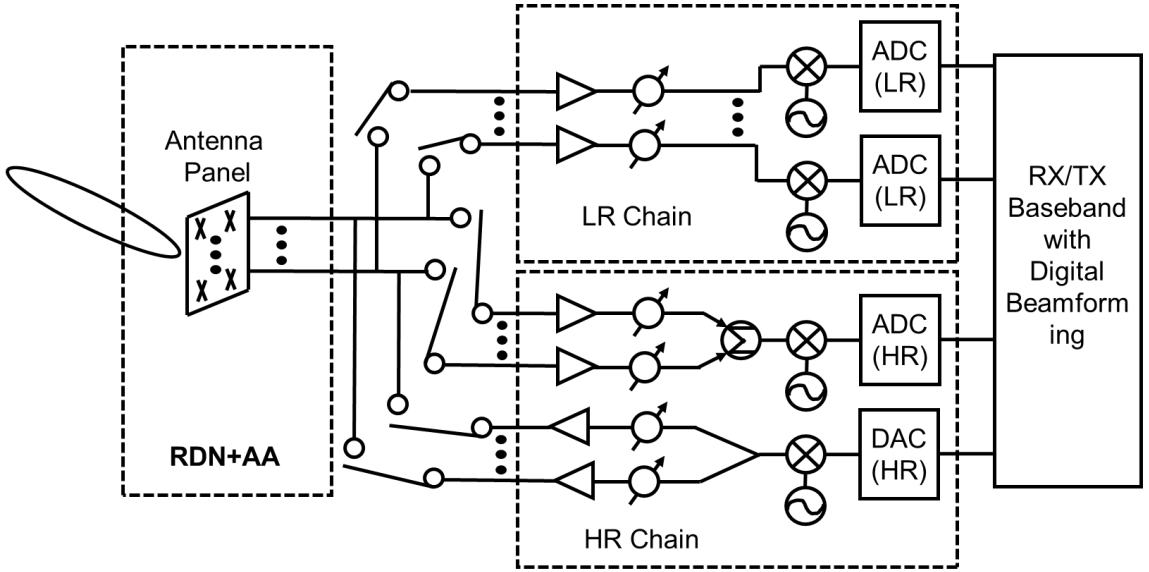

LR all digital array and analog/hybrid array share antenna panels

LR: low-resolution
HR: high-resolution
RDN: radio distribution network
AA: adaptive antenna

Fast BM Enhancements: Beam Acquisition Procedure

- Beam acquisition is performed using the low-resolution digital array by receiving signal and deriving the best beam(s) at baseband without beam sweeping
- Acquired beam(s) are then applied for data/control channel/signal reception and transmission (using analog/hybrid array) assuming beam correspondence
- Very fast beam acquisition and recovery can be achieved

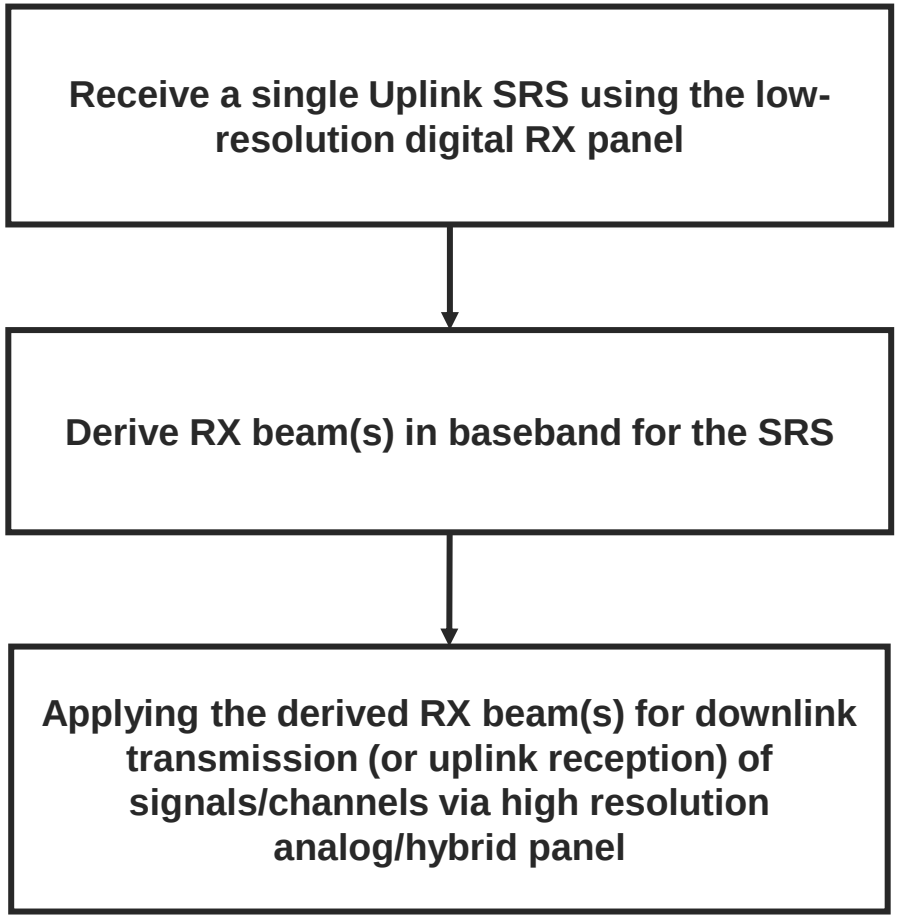

Fast BM Enhancements: Performance Benefits

- Very fast (one-step) beam acquisition
  - Beam acquisition is performed through baseband processing in a single step
  - Acquired beam(s) are applied for data/control channel reception and transmission assuming beam correspondence
  - No beam sweeping/reporting steps (P1/P2/P3), removes the largest portion of BM latency and leads to much faster beam acquisition and recovery
- Good tradeoff between fast BM, cost, and power consumption
  - Only beam acquisition is performed via digital array, low resolution ADC can be used to reduce cost and power consumption significantly
  - No need of all digital array (or array with high number of digital chains) for beamformed transmission
- Moderate standards impacts
  - Current beam/TCI indication framework can be largely reused with some simplification and modification

Cooperative MIMO with non-ideal backhaul and impairments

- Motivation mentioned by proponents
  - Rel-18 CJT assumes ideal backhaul and synchronization among TRPs, which limited the applicable deployment scenarios (e.g., to intra-site CJT only)
  - To enhance the system performance for scenarios with non-ideal backhaul, the issues of impairments such as inter TRP phase/delay and frequency offsets, etc., need to be addressed
  - Distributed cooperative MIMO robust to backhaul delay and synchronization offsets is desirable
- Possible enhancements
  - Cooperative MIMO w/ non-ideal backhaul
  - UE assisted calibration/sync. among TRPs (e.g., reports delay/phase/freq. difference between TRPs)
- Views
  - In our view, the work should be for non-ideal backhaul case to make it applicable to more deployment scenarios.
  - Justifications are needed to show, e.g., that UE-assisted feedback (such as phase) for CJT does work. The aspects could include at least how reliable and how realistic it can be.
  - Propose to support distributed cooperative MIMO with non-ideal backhaul

Cooperative MIMO w/ non-ideal backhaul (1/2)

- Downlink interference avoidance via SRS utilizing DL/UL reciprocity
  1. Precoded SRS associated w/ MU scheduling is used at the network to cooperatively probe downlink interference conditions
  2. Downlink precoding for inter-/intra-cell interference avoidance based on step 1
- Distributed operation across gNBs/TRPs without channel information exchange, well suit for non-ideal backhaul
  - Network only needs to coordinate resources for SRS interference probing and PDSCH transmission in a semi-static manner
  - No scheduling / channel / interference information exchange needed among gNBs

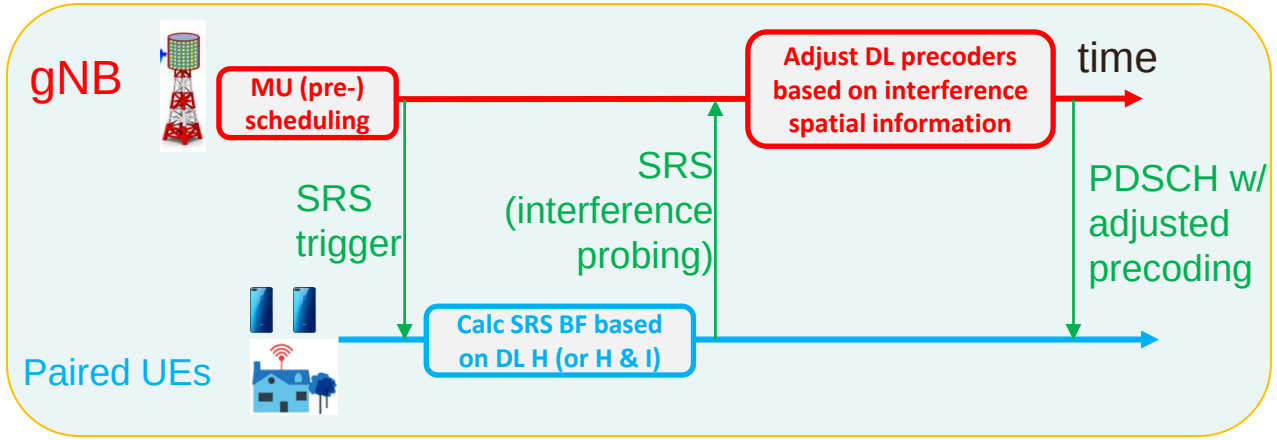

Cooperative MIMO w/ non-ideal backhaul (2/2)

- Substantial capacity gain (up to over 50%) observed for XR and FTP traffics
  - A specific implementation of Cooperative MIMO precoding via Bi-Directional Training (BiT)

App	PDB	Bit rate	Fps	Capacity					
				[DDDUU]			[DDDSU]		
				ZF	BiT	BiT Gain	ZF	BiT	BiT Gain
AR/VR	10 ms	45Mbps	60	8	13.1	64.8%	12.2	16.9	38.5%
		30 Mbps	60	13.7	19.9	45.3%	21.7	25.8	18.9%
CG	15 ms	45Mbps	60	12.7	16.9	33.1%	17.4	21.7	24.7%
		30 Mbps	60	21.5	25.6	19.1%	27.1	30.1	11.1%

- XR Capacity Comparison of between ZF and BiT
- TR 38.835: Study on XR enhancements for NR

- FTP Traffic Performance Comparison between ZF and BiT
  - In the bars, the value “1” is for the baseline and the other value (such as “1.46”) is relative to the baseline)
- R1-2108794, Enhancements on SRS flexibility, coverage and capacity, Futurewei, 3GPP TSG RAN WG1 Meeting #106bis-e

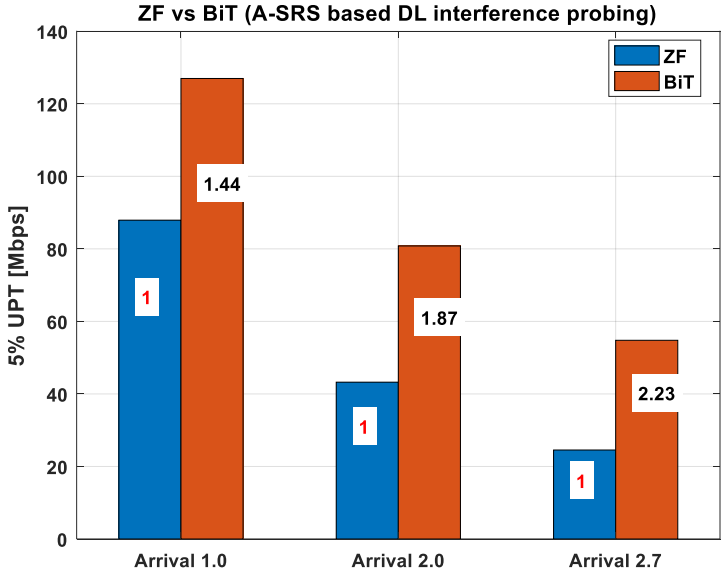

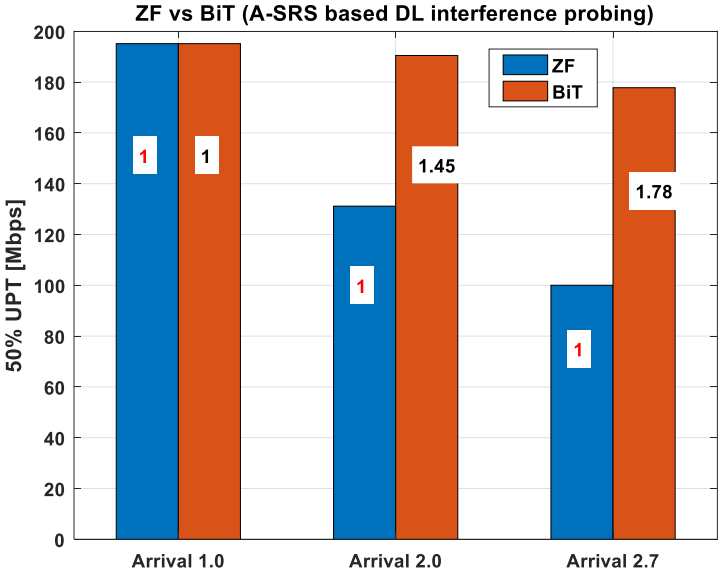

UL STxMP Enhancements

- Motivation mentioned by proponents
  - Rel-18 UL STxMP supports PUSCH + PUSCH. However, for multi-DCI based mTRP, PUSCH + PUCCH and PUCCH + PUCCH are not supported.
  - Supporting PUSCH + PUCCH / PUCCH + PUCCH in multi-DCI based mTRP cases can further improve system performance and reduce UL latency
- Possible enhancements
  - Support PUSCH + PUCCH / PUCCH + PUCCH in multi-DCI based mTRP cases (Rel-18 leftover)
- Views
  - Considering the fact that STxMP has been studied for a few releases and is very complicated, we do not support this direction in R19

Proposal for R19 MIMO Work Item Scope

- Based on the discussion in the previous slides, we propose the following as R19 MIMO work item objectives

- Support the following as R19 MIMO work item objectives
  - Study and specify new antenna architecture/procedure for very fast beam management
  - Specify enhancements of Rel-18 CSI framework to support >32 (64/128) CSI-RS ports
  - Study and specify distributed cooperative MIMO with non-ideal backhaul and impairments

Thank You.

Copyright © 2019 Futurewei Technologies, Inc.
All Rights Reserved.

The information in this document may contain predictive statements including, without limitation, statements regarding the future financial and operating results, future product portfolio, new technology, etc. There are a number of factors that could cause actual results and developments to differ materially from those expressed or implied in the predictive statements. Therefore, such information is provided for reference purpose only and constitutes neither an offer nor an acceptance. Futurewei may change the information at any time without notice.

FUTUREWEI
Technologies