A 5G Americas White Paper

AUG 2023

TRANSPORT NETWORKS FOR 5G

Contents

1. Introduction 3

2. 5G Deployment and the Transport Network 4

2.1 Advancements in 5G RAN Technologies 4

2.2 Continued Use of Microwave 5

2.3 Ethernet-based Fronthaul Interfaces 6

2.4 Integrated Access Backhaul (IAB) in 5G 6

2.5 5G Stand Alone Split CU/DU Architectures 7

2.6 Deployment of CUPS Architecture 7

2.7 Increased Deployment of Virtualized RAN 8

2.8 Network Timing, Frequency and Phase Synchronization Challenges for vRAN 11

2.9 Transport Slicing 14

2.10 Evolution of Cell Sites 16

3. Where Things are Going: 5G Deployment and Wireline/Wireless Convergence 19

3.1 5G Deployment and Sustainability 19

Conclusion 20

Appendix 21

Acronyms 21

Endnotes 22

Acknowledgements 22

1. Introduction

5G deployments continue their upward trend and will soon be the dominant mobile wireless protocol deployed in North America[1]. The ecosystem is gathering valuable information from these deployments, and one area of focus is the transport network. As part of 5G's evolution, key architecture components are being separated and distributed to the cloud in ways that make 5G more scalable and flexible. Meanwhile, bandwidth demands continue to increase at the same time applications and services require low latency. New requirements are presented to the transport network at each step of an operator's 5G journey. The transport infrastructure of today must be flexible to adapt to upcoming requirements as it enables new architectures, tools, and ultimately, 5G networks innovation, monetization, and performance. The fundamental goal of the 5G transport network is to deliver transparent connectivity that allows both present and future functions to work together seamlessly.

Figure 1: The elements of the 5G Transport network (Source: 5G Americas)

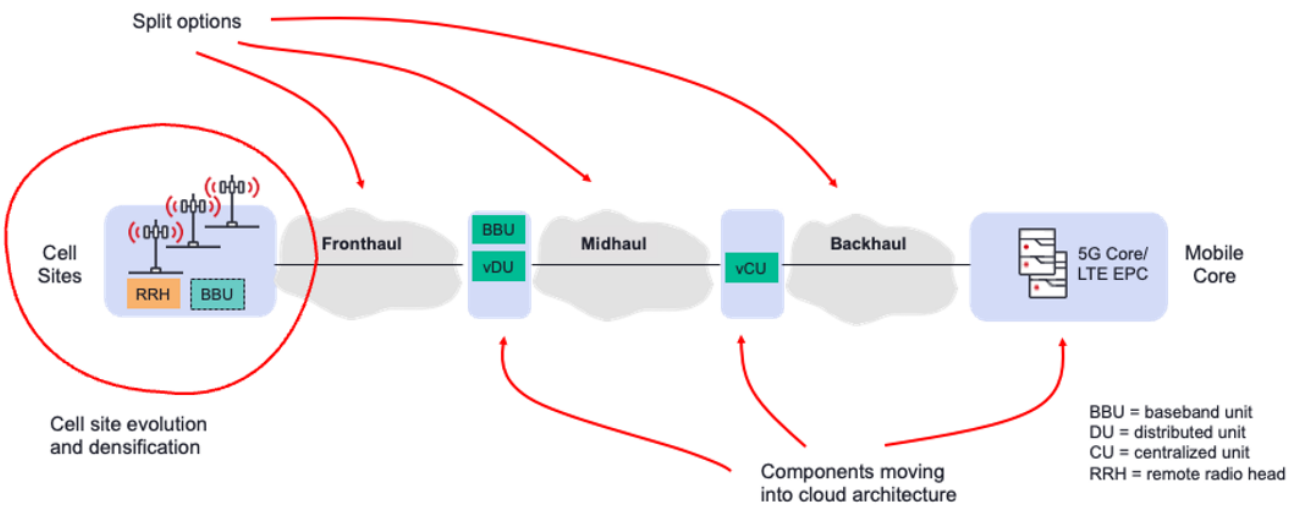

This paper will cover the current transport network landscape, explore areas of current work, and examine the future of 5G transport networks. It is crucial to analyze both *where* and *how* functions are split, because those factors will dictate where bandwidth and other characteristics will be required.

Characteristics influencing 5G transport networks include:

- Increased demands for bandwidth that result in the continuous need for more backhaul capacity.
- Flexible and scalable transport solutions.
- Latency and its effect on applications.

Areas of current work include:

- Connectivity for cloud-based RAN solutions.
- Network-based timing, and synchronization for frequency and phase.
- End-to-end network slices.

Topics of further work include:

- The increasing importance of transport network security.
- The impact of the metaverse, and massively immersive and interactive applications.

2. 5G Deployment and the Transport Network

2.1 Advancements in 5G RAN Technologies

5G is the fastest growing cellular technology in history, and 5G network deployments are accelerating at a rapid pace. According to Ericsson's November 2022 mobility report update, mobile data traffic for the Americas (North and Latin America) will increase by 28% CAGR year over year through 2027[2]. This explosion in mobile data traffic is comprised primarily of video traffic, with social media video content dominating the mix. Additionally, Fixed Wireless Access (FWA) traffic adds to the mix in the coming years.

Figure 2: Growth of mobile data traffic in the Americas (Source: Ericsson Mobility Report, Nov 2022)

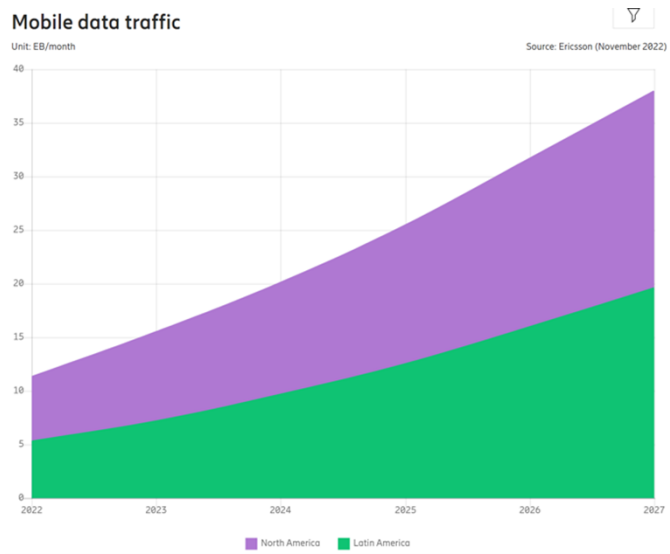

Figure 3: Mobile traffic by application category (Source: Ericsson Mobility Report 2022)

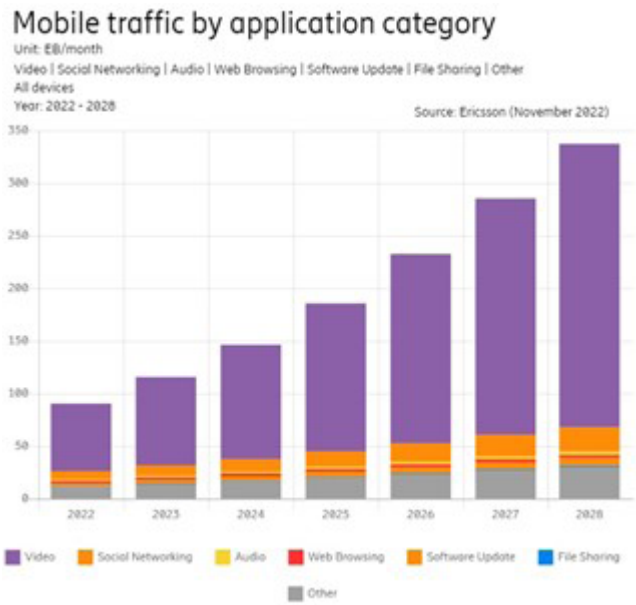

Compared to previous generations, 5G RAN technologies have evolved significantly to meet the demand for mobile data traffic. Not only is new spectrum available in higher frequencies with 5G, but there is also a wide range of advanced RAN capabilities that allow Mobile Network Operators (MNOs) to deploy new spectrum while leveraging their current spectrum assets. 5G provides mobile subscribers with unprecedented levels of capacity, capability, and quality of experience.

The complete 5G end-to-end system—including the transport network—must be in place to take full advantage of these exciting 5G RAN technologies and capabilities. The transport network is the underlying glue of the 5G end-to-end system. The transport network must be reliable, flexible, scalable, and secure enough to handle the stringent demands from the 5G RAN and Core.

The main 5G RAN technologies that will impact a transport network are:

- **Spectrum**: New Radio (NR) spectrum in the mid- and high bands, the advent of CBRS, and larger channel sizes ranging from 100MHz up to 800Mhz.
- **5G radio technologies**: To take full advantage of this new spectrum, 5G radios are available now with features like higher order modulation, Advanced Antenna Systems/Beamforming, Massive MIMO, and higher order traditional CPRI/eCPRI interfaces.
- **RAN coordination services**: Dual connectivity, dynamic spectrum sharing, carrier aggregation (4CC, 5CC, FDD + TDD), and coordinated multipoint (CoMP).
- **Device ecosystem**: mmWave spectrum and sub-6Ghz chipsets that support 100MHz to 800MHz RF channels enable >1 Gbps to UEs.

These 5G RAN technologies have a materially significant impact on the supporting transport network, and 5G transport has evolved to fully exploit these capabilities. In previous RAN generations, all RAN elements were physically co-located. The initial purpose of the transport network was simply to backhaul S1/X2 RAN site traffic to its corresponding packet core location. However, 5G has fundamentally changed this paradigm. New RAN architectures like centralized and virtualized RAN (vRAN), and the fronthaul and midhaul networks became vitally important. 3GPP has specified new RAN interfaces with much more stringent requirements on capacity, scalability, and latency.

This impact is evident based on the first wave on 5G deployments. RAN site backhaul capacity demand has increased by an order of magnitude from 1 to 10 Gbps, with forecasted growth to 100+ Gbps through 2027. Port density

and aggregate throughput has been impacted by equipment scalability, and disaggregated RAN architectures have shown the importance of new interfaces, timing and synchronization. Ultimately, it is crucial to find the right balance between secure connectivity and high performance.

2.2 Continued Use of Microwave

Fiber optic connectivity has been the foundation of 5G since its inception. In North America, all MNOs have announced significant investments in their fiber optic distribution network, and have steadily invested in fiber networks to continue its buildout. Fiber is especially important to core and inner-city aggregation sites with extremely high-capacity requirements, such as dense urban C-RAN sites.

However, given the preference for fiber, point-to-point (P2P) and point-to-multipoint (P2MP) microwave radio has experienced a renaissance of sorts, and will continue to remain a vital part of MNO 5G transport networks. RAN densification is the main driver. Simply put, there are, and will continue to be desired RAN site locations where fiber connectivity is impractical, too costly, or even impossible.

In the 5G wave and beyond, microwave radio systems remain viable for last-mile access in urban and dense urban areas, and necessary for certain last-mile and aggregation links in suburban and rural areas. In some markets, microwave networks are the only viable way to backhaul RAN traffic to packet core locations.

Other drivers for the microwave renaissance are some MNOs' desire to be first to market with 5G for increased market share and revenue, and the desire to increase population coverage metrics. The COVID-19 pandemic highlighted that reliable broadband connectivity is not vital in only dense urban areas, but necessary everywhere.

Microwave is a fast and cost-effective choice for RAN site backhaul. To support the demands of 5G, microwave technology has continuously evolved by leveraging and applying technologies like high-order modulation, adaptive modulation, dual band antennas, dual polarization and XPIC, higher order MIMO, and carrier aggregation. Another benefit of microwave radio systems is that its overall flexibility can be used for special events, public safety, disaster recovery, and connectivity for private networks.

Figure 4: Microwave Use Cases (Source: Ericsson 2022)

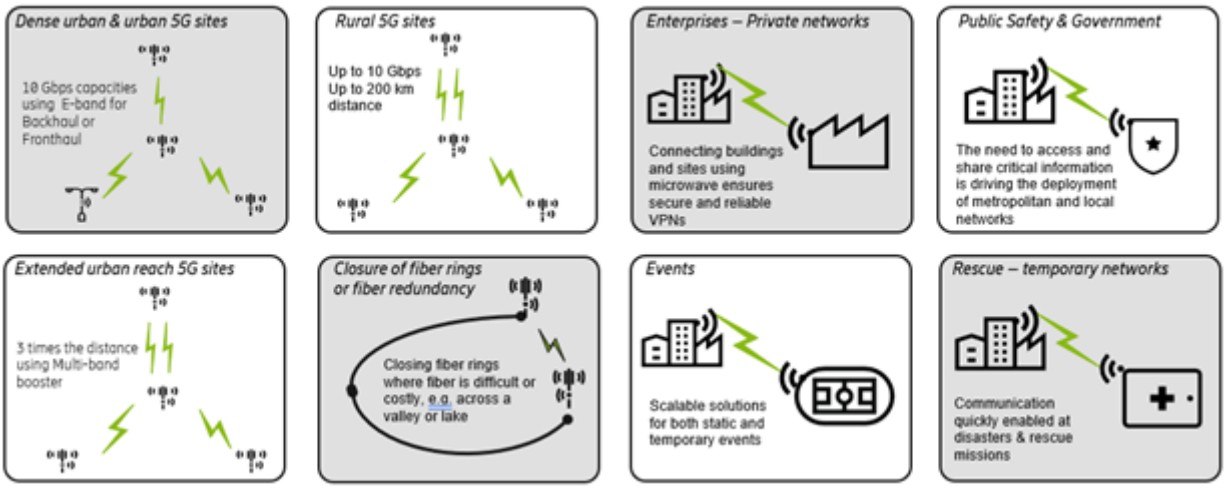

The future for microwave systems remains bright. E-band spectrum has entered the mainstream, and sway compensation antenna mechanisms have allowed operators to further secure path availability, and avoid outages for these high-capacity links. Research in how to apply D and W band spectrum is actively underway, and it's clear that microwave radio systems are a viable and critical part of 5G transport networks.

2.3 Ethernet-based Fronthaul Interfaces

Fronthaul technology has evolved with the advent of 5GNR, and the widespread deployment of Massive MIMO radios with active antenna systems. This evolution is required to mitigate the otherwise explosive bandwidth requirements on the digital fronthaul interface that have surfaced as a result of enhanced radio access technologies and additional NR spectrum. Packet fronthaul was introduced by the CPRI forum because existing CPRI fronthaul technology does not scale well with high antenna bandwidths and many antenna branches. The eCPRI specification was established to define the evolution of CPRI.

Figure 5: Evolution of Fronthaul (Source: Ericsson)

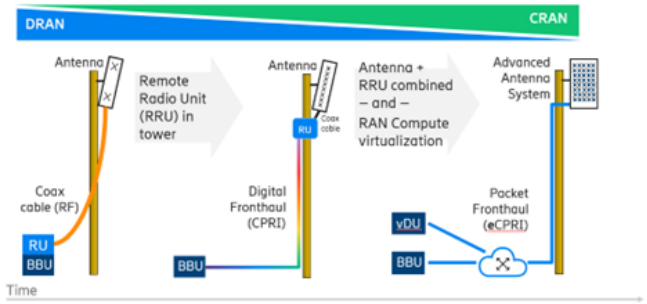

This specification defines the option to support functional splits between the radio unit and the distributed unit using packet fronthaul technologies. The functional split determines the fronthaul bandwidth while radio features determine the latency requirements, and the eCPRI specification defines industry-standard transport technologies (e.g., Ethernet and 1588v2 for synchronization).

Using mature, standard transport technologies like Ethernet reduces the cost of hardware components and introduces the possibility of promoting a more flexible relationship between the radio unit and the digital units. Benefits of packet-based fronthaul are:

- The eCPRI interface enables up to a ten-fold reduction of the required bandwidth (depending on the functional split between distributed unit [DU] and Radio Units [RU]). Additionally, the required bandwidth can scale flexibly and proportionally with user-plane traffic.
- eCPRI enables the efficient use of packet-based transport technologies. Mainstream technologies like Ethernet open the possibility to carry both eCPRI traffic and other traffic simultaneously in the same packet fronthaul network.
- Packet fronthaul also provides the ability to automate the rehoming of radio units, ultimately decreasing OPEX. The interface is future proof; it allows new feature introductions by software updates of the radio network.

For further insight into customization scenarios with popular functional splits and their impact on fronthaul bandwidth requirements, refer to the Small Cell Forum's Disaggregated RAN Transport Study calculator[3].

2.4 Integrated Access Backhaul (IAB) in 5G

Historically, access spectrum has been too valuable and limited for backhaul usage. LTE's approach provides a single backhaul hop using a separate frequency band from the access spectrum. This approach uses a fixed wireless terminal (FWT) to provide connectivity to a separate backhaul core instance. This approach, also known as LTE relaying, was studied in 3GPP Release 10 in 2011.

Wide mmWave bandwidths create more room for an IAB solution using 5G NR. 3GPP has been working on IAB since 2017, and it is currently standardized as part of Release 16 with enhancements in Release 17. IAB in 5G can provide flexible and scalable multi-hop backhauling, using the same or different frequency bands for access and backhaul. 5G IAB reuses existing 5G NR functions and interfaces designed to minimize impact on the core network. The architecture is scalable, so the number of backhaul hops is limited mainly by network performance requirements. From a transport network perspective, IAB provides generic IP connectivity as another alternative to fiber- and microwave-based backhaul options.

However, some constraints restrict the size of the IAB network topology due to the nature of sharing spectrum between access and backhaul use cases. For example, in a multi-hop network, the first backhaul hop must carry the backhaul bandwidth not only for the first IAB node, but also for all other IAB nodes further down in the hop chain. Deploying multi-hop networks will eventually lead to backhaul-limited nodes due to congestion. Increasing the number of hops will also increase the end-to-end latency

and raise the complexity for scheduling and routing to satisfy QoS. Larger IAB topologies might also require complex control functions.

Available mmWave spectrum will spark a wide variety of innovative 5G use cases, and IAB is one such innovation. IAB may serve as a versatile backhaul option for street level RAN sites in urban and suburban areas using small-scale star and tree backhaul topologies. It could also be useful for temporary deployments for special events or emergency situations.

2.5 5G Stand Alone Split CU/DU Architectures

5G standards introduce the concept of splitting the baseband into two halves:

- Particularly latency-sensitive functions associated with terminating the fronthaul, or the decentralized unit (DU).
- Less latency-sensitive coordination functions, or the centralized unit (CU).

Figure 6: C-RAN Model

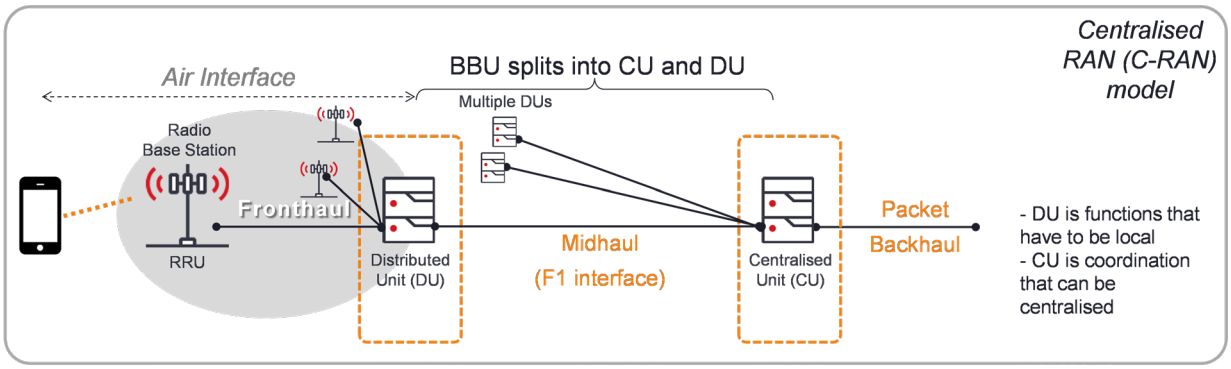

The link between the CU and DU has been termed “midhaul”, as fronthaul terminates at the DU, and backhaul originates at the CU. This split is very useful. Previously, the baseband unit was constrained to approximately 20km of the radios (that distance varying according to the details of the equipment and standards implemented), but now that only applies to the DU. As a result, the CU can be moved back into the network and used to coordinate a much larger set of geographically distributed nodes—more efficient in CAPEX, and further improving radio performance by reducing CU-to-CU boundaries.

The midhaul link has very similar bandwidth requirements to a backhaul link, so pulling the CU back into the network is the most sensible option. For this reason, many split CU/DU architectures will be viable choices in the future—even where fronthaul itself is not favored.

2.6 Deployment of CUPS Architecture

Control/User-Plane Separation (CUPS) allows for network optimization via the separation of:

- The throughput-heavy (often hundreds or thousands of gigabits/seconds) but simpler user-plane function (UPF); from
- The throughput-light but software intelligence-heavy UPF control plane Session Management Function (SMF).

This is achieved via the well-established N4 interface shown in Figure 7.

Figure 7: Diagram reproduced from 3GPP 23.501-i10, the non-roaming 5G System Architecture, showing the UPF/SMF split

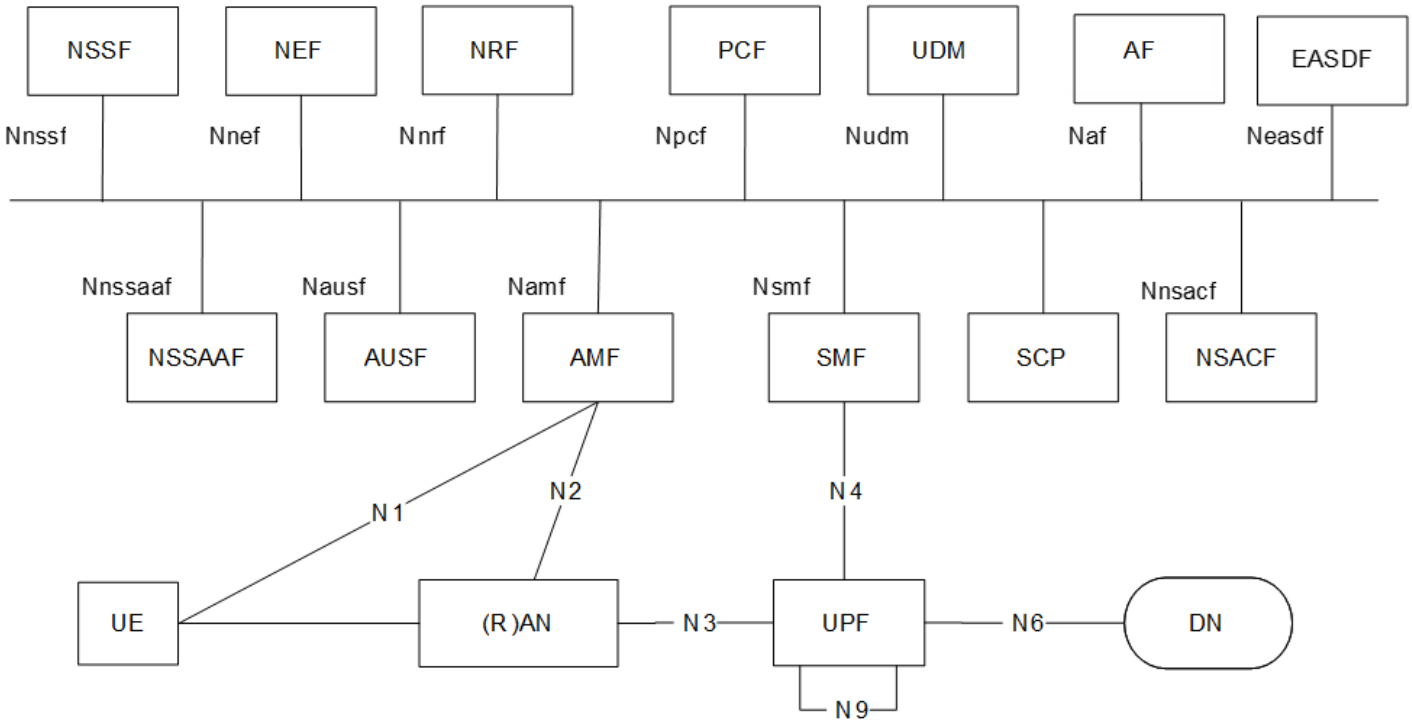

Historically, the UPF and the SMF have been bundled into the 5G Core (5GC). This split is advantageous for difference requirements because the SMF is typically supplied with many of the other 5G Controllers. This is where significant differentiation and flexibility of the 5GC resides and is convenient to supply as software. Further, the SMF does not consume much compute resource compared to the UPF. Additionally, the UPF performs high-volume processing (terminating GTP-U tunnels and performance per-subscriber queuing/shaping/policing), and may be suitable for implementation in hardware for lowest cost and power consumption.

This split is also advantageous in positioning because OPEX is reduced by centralizing control functions, and user experience is improved by distributing the UPF (by decreasing the network latency before content is reached).

These conflicting goals (centralization versus distributing) may be achieved by having few, centralized UPFs controlling and managing many distributed UPFs. This is why mobile operators are heavily invested in control/user-plane separation. Note that the disaggregation implied by control/user-plane separation may be implied in other areas (see wired/wireless convergence discussion elsewhere).

2.7 Increased Deployment of Virtualized RAN

Historically, baseband hardware has been entirely proprietary and supplied exclusively from radio vendors.

Virtualized RAN (vRAN) is defined as where baseband components (the CU/DU previously described) are moved to run on x86 processors (generic compute). The term vRAN is broad and may include either proprietary or standards-compliant baseband components.

The most common standard baseband components support interfaces defined by the O-RAN Alliance[4] (Open RAN)+, which provide additional detail on top of the 3GPP specifications to increase interoperability of radios from one vendor with CUs/Dus from another vendor.

Generic compute servers are commonly augmented with custom hardware such as:

- High-precision frequency/sync distribution, and sometimes GPS reception (the Timing Grandmaster function), which x86 processing is unlikely to achieve.
- Fronthaul accelerator cards, either inline or lookaside, to do the time-critical DU processing, or fronthaul-optimized processors such as the Xeon EE ("with vRAN boost").
- IPSec accelerators, to avoid wasting expensive compute resources on this onerous but easily accelerated function.

Some of these functions can often be performed with lower power consumption and CAPEX by a suitable cell site router, allowing the compute to be generic, or more generic.

2.7.1 Use of cloud services for DU

The DU function is rarely placed within a centralized cloud because of the fronthaul limitations of the fiber distance between radios and the DU (on the order of 20 km, based on latency through that distance of fiber). However, when virtualized, it can be placed within an edge cloud arrangement which also allows it to run other compute functions. This edge cloud must have hardware capabilities as previously described, so it is not a truly generic edge cloud. Instead, it should be considered a DU cloud, whose spare capacity can be used for generic compute.

2.7.2 Use of cloud services for CU

The CU hardware requirements are much better suited to general-purpose compute than the DU, except for non-mobile-specific requirement for IPSec. Furthermore, the ability to further centralize CUs makes them much more amenable to be placed in centralized private or public clouds. The architecture is increasingly being used to reduce CAPEX. As a UPF, the CU will have a high throughput with high cloud charges (OPEX), so more established operators are building custom compute farms for the CUs instead of going into generic clouds.

Connectivity from cell site to cloud services

Network optimization is a continuous area of focus that provides different service offerings/experience, time-to-market, and pricing. Service providers are adopting cloud-native 5G and deploying virtual functions in hyperscale environments as part of an optimization strategy to achieve agile, scalable, and cost-effective operations. The leading-edge cloud technologies leverage simplified operations, better policy control, and near-zero touch automation to provide deployment flexibility across public, private or hybrid cloud deployments. It empowers service providers to manage capacity with less complexity and accelerates growth.

Cloud RAN/Open RAN concepts embrace an open architecture where the cloud-native platform, the container orchestration system, and the underlying computer hardware are no longer provided by one vendor or built around a vendor specific solution. The open architecture has enabled service providers to flexibly distribute cloud-native 5G functions, and these aspects have radically changed the way service provider RAN transport can be built.

The capacity of eCPRI based fronthaul interfaces have gone up to 25G or higher with the introduction of MIMO radios and beamforming techniques. Operators have flexibility to either process baseband for each radio on different servers (e.g., 4G on 4G vDU and 5G on 5G vDU) or combine multiple radio baseband processing on common vDU servers. Cloud RAN/Open RAN also allows operators to deploy vDU servers at either the cell site location or the hub location. Transport networks must support high-density 10G/25G eCPRI interfaces at the cell site to terminate radio interfaces and 100G or higher bandwidth towards the CU hub location depending on the distributed architecture. In a typical DRAN architecture, cell site routers will aggregate eCPRI fronthaul traffic from each RU and provide it to locally connected vDU server. In a cloud architecture, vDU servers are typically deployed with 100G Network interface cards (NICs), and the transport will be responsible for the aggregate fronthaul links from all cell sites.

Solutions are also required for existing sites as service providers adopt a Cloud RAN/Open RAN architecture. Most of these sites are deployed with CPRI/eCIPRI radios. To support these radios, a fronthaul gateway (FHGW) function has been introduced that allows inter-working between the legacy CPRI and the new packet-based eCPRI protocol. The FHGW also reduces CPRI overhead and optimizes overall transport bandwidth on the packet-based transport.

Another critical change with a Cloud RAN/Open RAN architecture is in the implementation of a synchronization solution. Traditional baseband units were designed with high-precision oscillators to provide very stable and accurate synchronization to radios. Adopting similar precision and stability on commercial off-the-shelf (COTS) servers is not only challenging but also costly. In Cloud RAN, network-based synchronization is being considered to avoid any performance degradation in RAN services.

2.7.3 Adopting Public Cloud or Hybrid Cloud Architecture

Adopting public cloud for 5G services is a complex task for service providers. It requires planning and engineering effort, and achieving success requires considerable collaboration between the service provider and its vendors. Hyperscalers, or cloud operators, are still in the early stages of hosting telco services. Their enterprise- and IT-focused solutions, processes and policies need a different focus to adopt telco workloads and meet 5G service SLAs (service-level agreements). Service providers require unified transport management and monitoring tools and flexibility to operate connectivity in hybrid and multi-cloud deployments. A 5G transport architecture, with its redundancy and resiliency requirements, could become complex and un-manageable if not engineered upfront.

The transport architecture will require a unified end-to-end routing domain, traffic-engineering capabilities, and support for various protocols (for example BFD, Y.1731, BGP, Anycast, SCTP, SR/MPLS or SRv6 and so forth). There must exist a clear demarcation between the service provider's transport infrastructure and the cloud to determine SLA ownership. End-to-end visibility for QoS, service-level performance, orchestration, and automation of service slicing are more areas that require coordination. These requirements get even more complicated when distributed cloud and multi-cloud architectures are introduced.

Service providers are adopting virtualized routing functions to simplify the connectivity options to the public cloud. Fundamentally built on Kubernetes infrastructures, virtual containerized routing functions provide the flexibility to extend the service provider transport domain and interconnect it with virtual private cloud (VPC) services within public cloud infrastructures. This approach helps service provides extend traffic-engineering and transport slicing orchestration services across hybrid infrastructures. It also helps overcome the limitations of public clouds, as articulated in the previous section, and grants the service provider more control for transport service assurance, service management and orchestration from cell site all the way to the cloud.

Virtual routing is also being considered for lean outdoor cell sites which have highly constrained power, space and cooling requirements and cannot accommodate a separate, physical cell site router. Integrating virtual routing within vDU servers allow service providers to maintain uniform transport solutions across all sites.

2.7.4 Connectivity from Cloud RAN/Open RAN

The previous points are collected into Figure 8 (page 10).

Figure 8: Idealized/simplified split DU/CU network architecture.

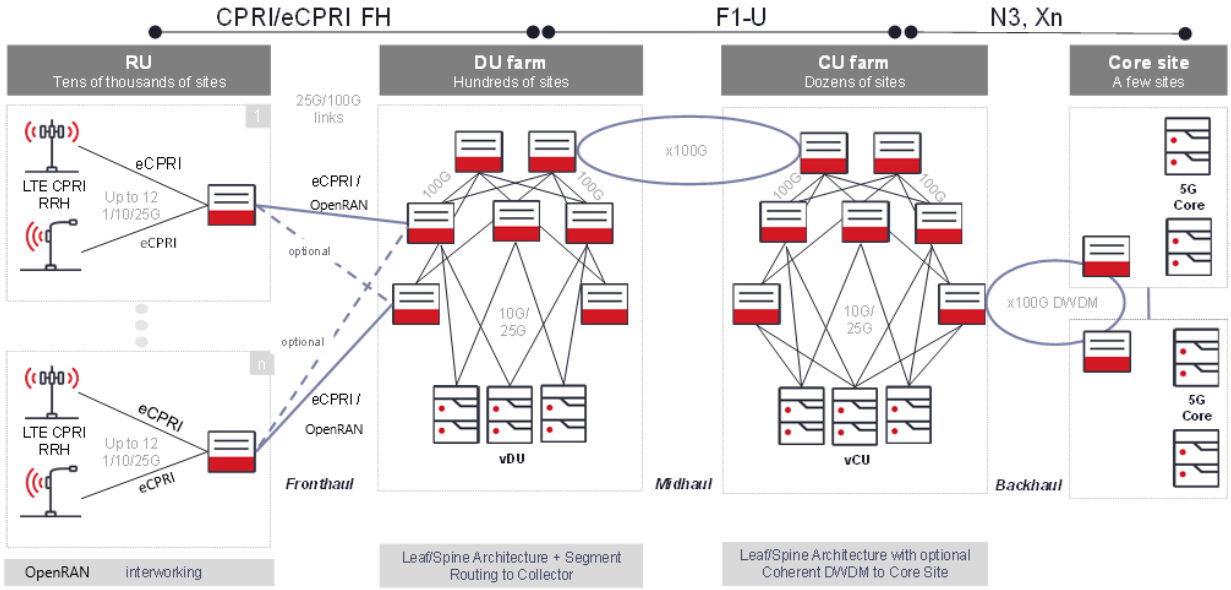

This progressively shows:

- Radios, with fronthaul aggregated and sent over to a...
- vDU farm, which is then aggregated up to a...
- vCU farm, which is then aggregated up to a...
- 5G Core location.

Note: tens of thousands of cell sites aggregate into a much smaller number of core sites. Some of these may be collapsed, e.g., collapsing the DUs onto the cell site to avoid the need for high-speed fronthaul links in the case of high-bandwidth costs.

2.8 Network Timing, Frequency and Phase Synchronization Challenges for vRAN

In the 5G RAN, time synchronization is critical for the proper operation of the network. Accurate time synchronization is required almost everywhere in the network to realize the full potential of 5G NR, and to improve efficiency, reliability and capacity of the mobile networks. Time synchronization between radio base stations prevents interferences, cross-talks, and the related loss of signal and packet drops. If not implemented or managed properly, time synchronization issues could lead to dropped calls, interrupted services, and poor quality of experience.

3GPP (TS 38.104 and 38.133) provides specifications for frequency and phase synchronization at the radio air interface to meet NR deployment requirements across various use cases. ITU-T (G.8271.1 and G.8271.2) specifies timing profiles and network budget for the transport network to meet those requirements for 5G RAN. These requirements can be classified into a) NR TDD specific requirements, b) improved NR performance and spectrum efficiency and c) Use case specific requirements.

2.8.1 NR TDD Requirements

TDD radios use the same frequency for uplink and downlink transmissions, so they require time and phase synchronization in addition to frequency synchronization. Also, if two adjacent radio sites are using the same frequency, time and phase synchronization will be required to avoid interference. In 3GPP, cell phase synchronization between NR radios is specified as 3μs. That leaves ± 1.5μs time error accuracy from the common time reference to each radio, and a remainder of ± 1.1μs to the transport network if the common time refence is connected over the backhaul network. The frequency synchronization is specified as 50pbb at the air interface level, and a budget of 16pbb is given to the backhaul transport network.

2.8.2 NR Performance and Spectrum Efficiency

A range of enhanced radio techniques have been introduced for 5G, many of which involve inter-operation of cells within a close vicinity or local area. The advanced techniques of coordinated transmission and reception from radios have been standardized over the years to drive benefits of higher throughput or better cell performance. 5G NR deploys advanced coordination techniques for various use cases like carrier aggregation (CA), Dual Connectivity, Coordinated Multipoint (CoMP), DSS, eMBMS and so forth. Such techniques further tighten the synchronization requirements within a cluster of radios.

3GPP specification defines time error budget of such deployment use cases as part of “relative time error” requirements. The most demanding functionality, such as inter-band and intra-band CA, and the use of MIMO antennas, have a very stringent relative time alignment error of 130ns to 260ns measured at the antenna air interface as shown in Figure 10.

Figure 9: TAE Positioning

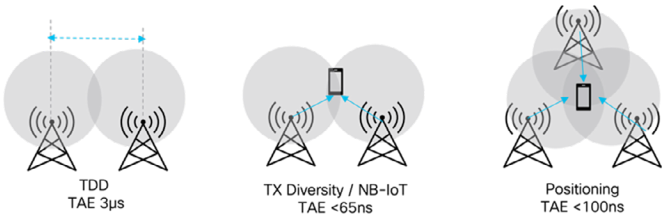

Figure 10: TAE Requirements

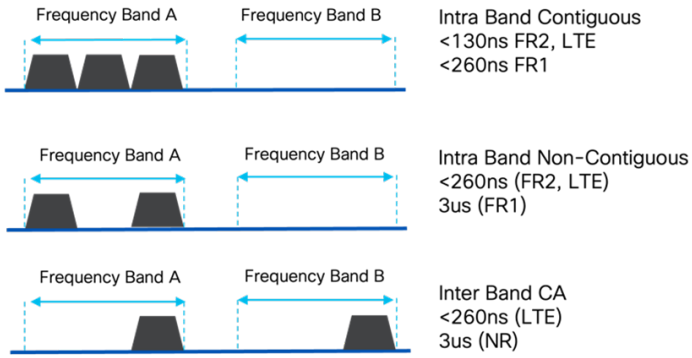

The relative timing is also applied to the 5G fronthaul architecture where a set of O-RUs (Open Radio Units) are associated with centralized or common O-DUs. O-RAN WG4, includes specifications for the eCPRI (enhanced Common Public Radio Interface) synchronization plane for fronthaul deployments. Four Synchronization topology configurations are defined by O-RAN as illustrated in Figure 11.

Figure 11: O-RAN- Fronthaul architecture options

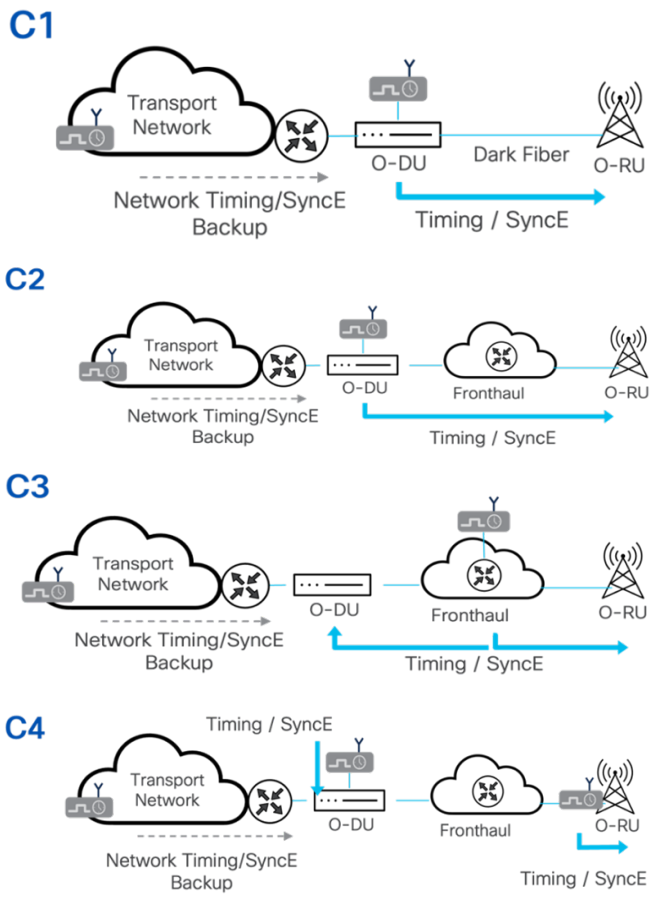

Two types of O-RUs are defined:

- The regular O-RU containing class B T-TSC (Telecom-Timing Slave Clock)
- The enhanced RU containing class C T-TSC clock of ±15ns time error.

With an enhanced O-RUs, the relative time error budget at the UNI of the RUs could be as lows as 190ns or 60ns as shown in Figure 12.

Figure 12: Example: Relative time budget at the UNI of the RU

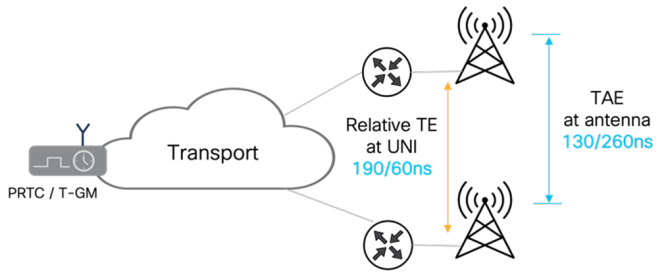

2.8.3 5G Use Case Specific Requirements

Some of the deployment use cases demand more stringent accuracy from the 5G NR radios (e.g., location accuracy and position tracking). Positioning services will be one of the essential functionalities in 5G use cases. The measurement of accurate positioning depends on a time difference measured over-the-air interfaces. One such method, observed Time Difference of Arrival (OTDOA), assumes that the relative phase offset between the reference stations are within the defined accuracy limits, and that their relative phase offset is known. 3GPP specifications define a stringent ±100ns phase accuracy as positioning requirements between adjacent 5G NR radios.

2.8.4 Clock Specifications

To meet the stringent requirements of 5G RAN, timing accuracy and performance has been improved across various clock types and components. Global Navigation Satellite System (GNSS) is a widely used, primary technology to distribute UTC-traceable reference clocks. Clear satellite visibility is critical for the operation of GNSS receivers. However, ionospheric delay variations, solar activities, and weather conditions are additional factors that could impact the performance accuracy of the GNSS receiver in the range of several nanoseconds. The existing single-band GNSS receivers (PRTC-A with ±100ns accuracy) are limited to mitigate these errors, and 5G NR demands better receiver technologies to meet previously discussed deployment requirements.

ITU-T G.8272 and G.8272.1 tightened the requirements of their primary reference time clock (PRTC) specification by releasing PRTC-B and ePRTC specifications. PRTC-B uses multi-band GNSS receivers to handle ionospheric influences by measuring delay on two different frequencies and to improve overall timing accuracy. Multi-band GNSS receivers also offer better resilience to jamming and spoofing attacks. ePRTC further tightens the performance by lowering the dependency on satellite systems and protecting 5G networks against outages. ePRTC receivers provide long holdovers (up to 14 days) while maintaining 100ns accuracy.

Table 1: PRTC Receiver Performance classes defined by ITU-T G.8272.1 specifications.

Type of Receiver	Time Error Performance
PRTC-A	±100ns
PRTC-B	±40ns
ePRTC-A	±30ns

ITU-T revised its clock recommendations and introduced timing characteristics for new class C/D clocks to meet the complex transport requirements in the 5G RAN transport. The specifications enable the transport network to deliver the right quality clock to the cell tower radios in various deployment scenarios, and to support the demanding NR performance and use case requirements.

Table 2: Clock Performance classes defined by ITU-T G.8273.2 specifications.

T-BC/T-TSC/T-TC	cTE	dTE (MTIE)	Max |TE|	dTE (high pass filter)
Class A (with SyncE)	±50ns	40ns	100ns	70ns
Class B (with SyncE)	±20ns	40ns	70ns	70ns
Class C (with eSyncE)	±10ns	10ns	30ns (T-BC) Under study for T-TC	Under Study
Class D (with eSyncE) *no T-TC	Under Study	Under Study	5ns (low pass)	Under Study

On packet-based transport networks, delivering high-quality and accurate clocks requires these networks to support frequency and time synchronization at both the physical layer and also over the packet layer. ITU-T defines different profiles to carry these signals over time-aware and timing un-aware packet-based networks.

Figure 13: ITU-T PTP Profiles

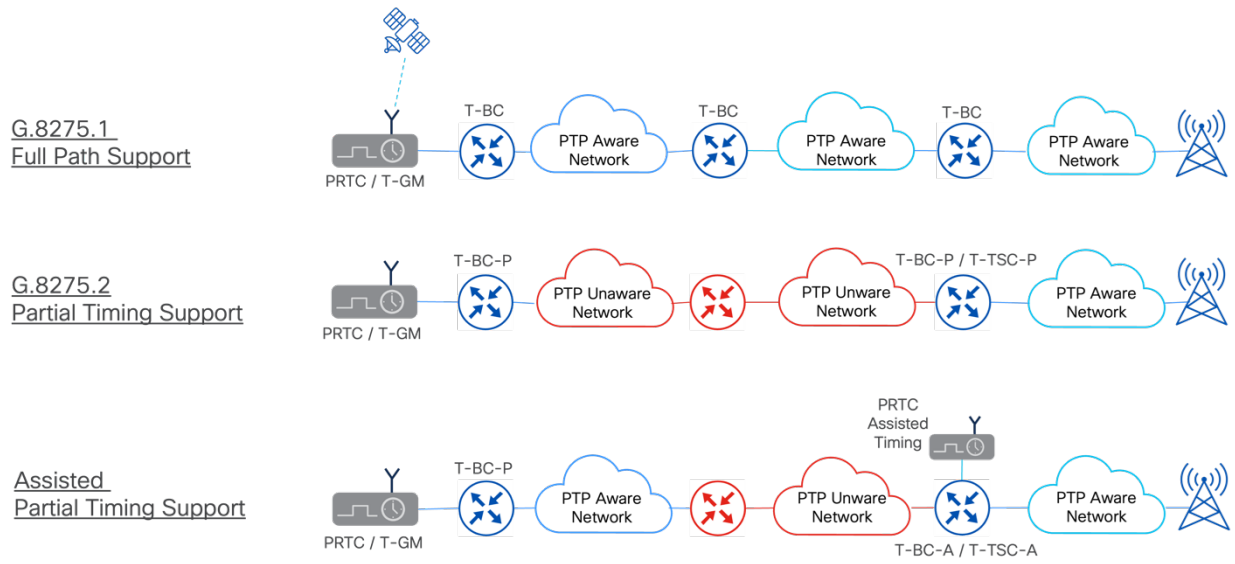

ITU-T G.8275.1 profile is designed for full time-aware networks where each network node is a boundary clock or transparent clock across the chain. G.8275.1 delivers the most accurate clock in the network and is a mandatory requirement for fronthaul. ITU-T G.8275.2 is a unicast IP based profile designed to support a network which is partially time-aware. For partial time-aware networks, delay asymmetries and packet delay variations could impact time accuracy and stability. Consequently, assisted partial timing support (APTS) mode is introduced to maintain timing accuracy on high PDV networks. In APTS mode, local GNSS receivers are used as a primary source to synchronize the radio, but the holdover time can be extended using assistance from the transport PTP in case of GNSS reference failure. In the APTS scenario, the accuracy and stability of the clock depends on the quality of the assisting transport PTP. 5G technology also supports over-the-air (OAS) synchronization. Combining APTS with OAS allows synchronizing radio cells that do not have local GNSS or network timing support.

The improvement in frequency synchronization is equally important to help syntonize the network and maintain performance demanded by class C/D clocks. The new ITU-T enhanced EEC standards, G.8262.1, define performance requirements for enhanced synchronous Ethernet (eSyncE) clocks. Enhanced SyncE delivers key benefits for packet-based networks including:

- Improved clock stability by 5x with improved jitter and wander performance.
  - » The maximum time interval error (MTIE) for wander generation is 7ns (@0.1s observation interval) for eEEC vs 40ns for EEC.
- Minimized phase error for syncE assisted PTP by reducing noise generation, transient and holdover performance, and the benefit of class C clock requirements.
  - » Noise transfer bandwidth is 1-3 Hz for eEEC versus 1-10 Hz for EEC.
- Deployment of longer chain of clocks within ±1.5μs performance.
  - » Holdover initial frequency offset is 10pbb for eEEC versus 50ns for EEC.

Short-term and long-term transient response phase jump is 10ns for eEEC versus 120ns for EEC.

Time Synchronization is a fundamental requirement for 5G radio operations and performance. Selection of adequate PRTC, class C clocks and enhanced syncE is almost mandatory to meet 5G phase and frequency performance requirements. The accuracy and stability of the timing synchronization depends on various environment factors, deployment conditions and selection of timing profiles in packet-based networks; and hence ample attention should be given to achieve an effective and efficient distribution of time synchronization.

2.9 Transport Slicing

Transport networks have been supporting network slicing long before it became an area of focus in 5G RAN. But to understand how a RAN slice impacts the transport network, it's important to understand the RAN slice a bit more.

From a RAN perspective, it starts with the PDU (Protocol Data Unit) session, which is the logical connection between a UE and the UPF in the 5GC connected over any Data

Network (DN) like the internet. The PDU session is comprised of stitching together a RAN partition, a transport network VPN, and specified Core Network VNFs. The traffic within the PDU session can be prioritized against other slices to offer slice level differentiation and isolation. One or many transport network slices must map to RAN partitions and are governed by partition policies to secure capacity and isolation.

A further level of differentiation can be achieved by offering different QoS/5QI profiles for the QoS flows in the PDU session. This way the RAN slicing architecture offers multi-dimensional differentiation that contributes to SLA and service-level specification (SLS) fulfillment for slicing use cases.

Figure 14: End-to-End Network Slicing Overview (source: Ericsson 2021)

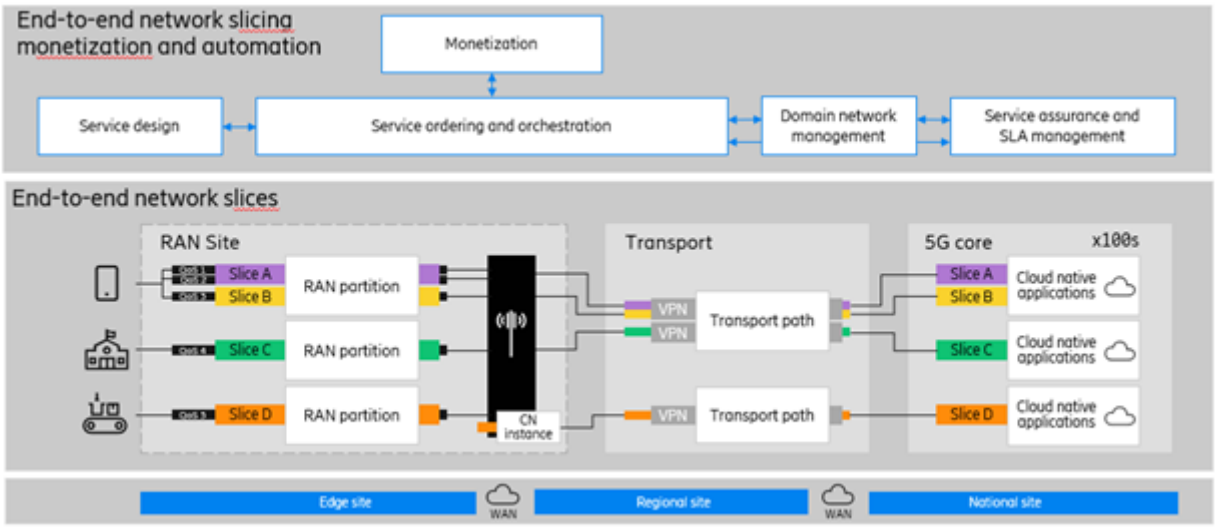

SLAs for RAN slices in the transport network can be implemented in different ways as well. One way is to over-dimension/over-provision the transport connection—even though this might not always be feasible or economically justifiable. Alternatively, a dedicated transport service can be created for cases where latency is an issue. Another reason for dedicated transport could be that per slice observability in the transport network is required. A third scenario is that the transport network could be logically separated and mapped to the RAN slice. Traffic flows for an individual slice, or a group of slices, could be mapped into separated transport services in the transport network. These transport services should have an SLA that matches the required SLA for the end-to-end slice or group of slices.

Transport services can be mapped into the uplink based on VLAN ID, destination IP address or physical port from the RAN node (such as a baseband unit) and mapped into the downlink based on source or destination IP address from the data center. If a slice, or group of slices, has several traffic flows with specific requirements and the transport service is not over-dimensioned, then a packet contention mechanism is required. This is usually QoS markings (DSCP or p-bit) in the packet to ensure the individual traffic flows get the proper treatment required for that traffic class. Mapping of 5QI to DSCP and p-bit can be done per individual slice or per group of slices.

Another technique to implement network slicing is FlexEthernet, also called Flex and is a standard defined by the OIF Flex Ethernet Implementation Agreement. FlexE provides a generic gearbox mechanism for supporting a variety of Ethernet MAC rates (10G, 40G, nx25G) that may or may not correspond to existing Ethernet PHY (physical layer) rates. This means that it allows for flexible Ethernet connectivity between routers and optical transport equipment independent of the physical interfaces between the two devices.

FlexE dissociates the Ethernet rate on the client side from the actual physical interface (also called server) by introducing a new shim through the IEEE defined MAC and PCS layers. The current FlexE standard is defined for 100G PHYs, with 200G/400G PHYs in subsequent Implementation Agreements.

FlexEthernet provides several benefits by supporting three use cases:

- **Bonding**: Bonding groups standard-rate interfaces together to enable larger capacity clients.
- **Sub-rating**: Sub-rating matches the client or service rate to a lower-speed WDM line capability.
- **Channelization**: Channelization provides a means of aggregating lower rate clients onto an interface to provide a scalable alternative versus other higher layer channelization schemes.

2.10 Evolution of Cell Sites

The mobile cell site has evolved over time. The original cell sites started as ground towers owned by one operator and then transitioned to shared ground tower assets. From there, the cell site evolved to rooftop towers, and then with recent densification requirements moved to leverage urban assets or "street furniture" such as light poles, kiosks, bus kiosks and even intelligent trash bins. The cell site continues to evolve such as 5G onboard satellite configurations options via non-Transparent Satellite HAPS (High Altitude Platform Station)

Current ground-based mobile cell sites have a distinctive look that one can easily identify.

Figure 15: Ground-based mobile cell sites

The following is an example of the evolution to "street furniture"/urban asset cell sites. It shows the 2nd stage of Links NYC turning prior pay phone locations (power and fiber) into digital kiosks and cell towers.

Figure 16: Links NYC repurposing pay phone locations into mobile cell sites

Figure 17: 5G NR-NTN

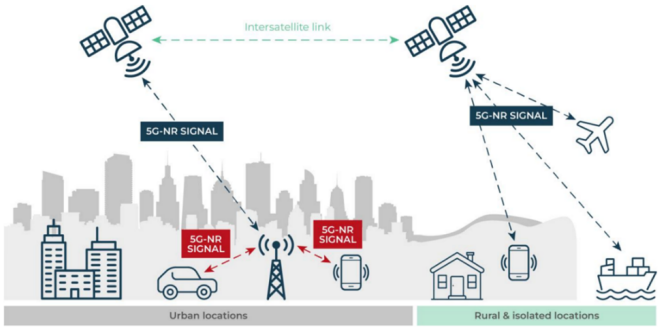

With 3GPP Release 17 the LTE and 5G NR air interfaces have been extended for use with satellites and is known as Non-Terrestrial Networks (NTN). Prior to NTN, both the LTE and 5G NR air interfaces had been designed and optimized to transfer data over relatively short distances of a few kilometers or a few tens of kilometers in extraordinary circumstances. The wireless 3GPP Release 17 specification includes two new standards for satellite communications from smartphones, mobile electronics, and Internet of Things (IoT) devices directly to satellites. While satellites have always been part of the wireless communications infrastructure, they have traditionally only provided backhaul network communications, not direct communications to mobile devices other than clunky satellite phones and emergency equipment. Direct satellite communications with individual mobile devices will help overcome gaps in terrestrial cellular networks, providing a truly global infrastructure that can be leveraged by a variety of industries, and bridge the digital divide by bringing

wireless communications to rural areas that often lack the infrastructure even with the rollout of 5G cellular networks.

Release 17 includes two new standards for satellite networks: IoT-NTN and New Radio NTN (or NR-NTN).

The IoT-NTN standard defines narrow band using a 200KHz channel for two-way messaging and other low-bandwidth consumer and embedded/IoT applications, such as location tracking, asset tracking, and sensor monitoring. The data rates for IoT-NTN are like the data rates that were experienced in 2G. It will provide basic data connectivity well designed for IoT telemetry type applications.

The NR-NTN standard defines the use of 5G NR access technology for high-bandwidth communications using channels ranging from 5MHz to 20MHz. NR-NTN will be able to support traditional broadband communications such as video chats, gaming, and video streaming. For the first generation of NTN support, satellite communications will essentially be an added service.

3GPP Release 18, also known as 5G Advanced, will bring further enhancements to NTN communications. Some of these enhancements include aggregation with other frequency channels (as has been done with cellular technology between carrier channels) and going forward integration with Wi-Fi connectivity. At that point, satellite communications will become another seamless but critical channel for global cellular communications.

2.10.1 Increase in number of cell sites due to higher frequency band radios

The key new frequency band to increase user speeds with 5G is in the 3.5GHz band—widely deployed among first world countries globally, with the US catching up quickly. This has approximately half the reach of the ~2GHz band where 4G is deployed due to higher atmospheric and other attenuation. To achieve similar coverage, some operators believe twice as many cell sites are required a 4x optimization that twice as many sites would suggest.

Each new cell site requires an uplink and therefore presents a new transport requirement.

Mostly limited to the US at present, cell sites operating in the millimeter wave (mmWave, 24 or 28GHz) is often deployed. The reach of these cells is on the order of 200 meters, perhaps a little more with high-gain external antennas. To achieve the desired coverage, substantially more cell sites are required. A key service type for this frequency range is FWA.

The more cell sites there are, the more eager the MNO becomes to cost-optimize them. IAB (i.e. self-backhaul) or microwave backhaul became popular to reduce CAPEX, or dense fiber-based solutions such as PON start to become very attractive.

As more traffic that was traditionally connected via wireline networks shifts to radios, additional sites will be required not for coverage but for capacity, e.g., at shopping malls, conference centers, train stations, airports etc.

2.10.2 Cell site environmental requirements

Most telecoms transport gear sits in secured, air-conditioned, manned, spacious central office environments with racks being 600mm (telco) or 800mm (data center) deep.

Conversely, most cell site equipment is in shallow non-air-conditioned street cabinets. The common requirements for equipment in non-environmentally controlled locations is that it be <=300mm deep and able to support an industrial temperature range of -40 to +65 degrees C.

In locations with wider streets, such as some in the US, it may be possible to replace current street cabinets with deeper ones, but this comes at a significant cost which is likely to be more than the cost of getting temperature-hardened equipment instead.

Alternatively, some radio vendors are moving to mount their electronics in outdoor-grade locations (no cabinet required), and so it may be convenient to mount the transport equipment without a cabinet. The example shown also dispenses with filters and fans by using a large external heatsink—eliminating a major service item (OPEX) and power draw/source of noise (cooling fans).

Figure 18: Example outdoors-mount cell site transport equipment.

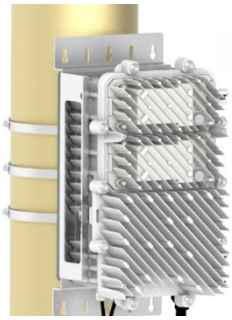

2.10.3 Security telemetry

Cell sites are commonly unmanned and highly visible. Most have tall masts commonly placed near where people live and are therefore targets of crime. Historically, many operators have asked for door switches to detect unauthorized access. Increasingly operators are now asking for CCTV cameras to be added to the uplink fiber via a shared cell site router device. Such CCTV may also help to resolve disputes between multiple contractors at a site.

2.10.4 Diverse cell site locations—other urban assets

Particularly as part of cell site densification, there has been a push towards using existing street furniture or something that looks like existing street furniture for smaller cell sites in built up areas. This can lead to new transport device requirements, particularly in terms of physical packaging (notably shape). Examples include:

- Roofs of tall commercial buildings often have little spare space and need compact equipment.
- Street lighting is often physically constrained and may need tall thin rainproof transport equipment—and possibly with a circular cross-section—to fit within the street light column.
- Advertising hoardings/street signage/bus stops hosting small cells need compact outside-mount devices.

3. Where Things are Going: 5G Deployment and Wireline/Wireless Convergence

A significant amount of mobile traffic is generated and consumed indoors. As such, Indoor RAN deployments are increasingly becoming part of an overall MNO densification strategy for coverage extension and private networks driven by enterprise digitalization and industry 4.0 use cases. Deploying some mid- and high-band spectrum inside buildings creates a range of concerns for MNOs due to factors including free-space loss, penetration loss, reflection, refraction, and various forms of fading.

Another main issue is the backhaul connection from buildings to the MNO packet core. Since buildings can have a wide range of WAN connection types from a variety of ISPs, this variability adds risk in terms of RAN performance, security, OA&M and resiliency. This is defined as untrusted backhaul.

The good news for 5G systems is that the TS 33.501 3GPP standard specifies a security architecture, i.e., the security features and the security mechanisms for the 5G system and the 5GC, and the security procedures performed within the 5G system. The main concern for the transport network is to enable a secure connection from the UE to the 5G Core control plane.

As we know from LTE, IPSec VPNs from baseband to packet core SecGW (where required) are the de facto approach to securing the S1/X2 RAN interfaces. This will persist with 5G backhaul. What's new, and under study now, is how to find the right balance between performance and security for the new packet fronthaul and midhaul interfaces (eCPRI and F1). Fronthaul traffic is bandwidth-intensive and latency-sensitive. Applying IPSec tunnels in a centralized RAN architecture may negatively impact RAN performance. This issue may not be as critical for the F1 interface but needs further study as virtual RAN architectures make their way into the indoor RAN environment.

As RAN technology begins to consider Terahertz spectrum for 6G, the trade-off between performance and security will become increasingly important.

A different future angle is set out in the Broadband Forum's Wired Wireless Convergence work formerly known as Fixed-Mobile Convergence. Briefly summarizing, this allows fixed networks to re-use the authentication and subscriber management functions such as UPF from the wireless core, eliminating duplication of investment and operations—allowing consistent subscriber management and operations across the two domains, while also bringing the sophistication of the 5G QoS and service model into the wired domain.

3.1 5G Deployment and Sustainability

In the 5G ecosystem sustainability initiatives are part of every organization's agenda including telecom service providers, telecom equipment providers and telecom standards bodies. Recently, the International Telecom Union (ITU) published guidance (ITU-T L.1471) for information and communications technology organizations on how to set net-zero emission targets. The initiative also defined innovation projects to improve energy efficiency and reduce emissions. The GSM Association (GSMA), which represents the interests of mobile operators worldwide, was one of the first to embrace the vision and shared commitment to help mobile industry to achieve net-zero emissions by 2050. To support such initiatives, mobile operators in North America have entered into green power partnership agreements to significantly increase the use of renewable electricity in telecom.

Energy is a major expense for telecom operators and reducing greenhouse gases (GHG) makes sense financially. 5G standards have more advanced features than previous generation networks to efficiently use power. artificial intelligence (AI) and predictive analysis could be used to manage the complexity and density of 5G traffic to efficiently adjust power consumptions and improve overall performance. Network monitoring and management tools are evolving to measure energy efficiency key performance indicators (KPIs) to drive the net-zero emissions initiatives and meet sustainability goals.

Conclusion

The initial phase of 5G deployments primarily focused on Enhanced Mobile Broadband and providing 5G services to a wide user base. This included large geographic deployments in many parts of the world including the US and Canada. However, the industry is now starting to shift greater attention towards new services, enhancing efficiency, monetization, expanded use cases, and performance of 5G networks. The next stage of this evolution is expected to involve adopting more centralized, virtualized, and open architectures, utilizing diverse slicing techniques, incorporating more connected elements at cell sites, and implementing systems that require precise frequency/phase/time synchronization. Additionally, a range of new tools and technologies will be introduced, all of which will impose new performance requirements and demands on transport networks.

The development of these transport networks will face the challenge of supporting energy- and space-efficient solutions for various cell site environments. The transport network solutions must also deliver the appropriate port-density, accommodate different xHaul segments and slicing approaches, and provide robust timing and synchronization capabilities. Essentially, the transport infrastructure serves as the foundation of the 5G network, supporting the evolution of the RAN (Radio Access Network) and providing the basis for the entire 5G system to progress. A flexible, scalable, and future-proof 5G transport network is crucial for enabling innovation and facilitating the smooth and uninterrupted advancement of 5G implementations.

Appendix

Acronyms

APTS: Assisted partial timing support

CA: Carrier Aggregation

CAPEX: Capital Expenditure

CBRS: Citizens Broadband Radio Service

CoMP: Connectivity, Coordinated Multipoint

CPRI: Common Public Radio Interface

CU: Centralized Unit

CUPS: Control and User-Plane Separation

DN: Data Network

DSCP: Differentiated Services Code Point

DU: Distributed Unit

EEC: Ethernet Equipment Clock

FWA: Fixed Wireless Access

FWT: Fixed Wireless Terminal

GNSS: Global Navigation Satellite System

HAPS: High Altitude Platform Station

IAB: Integrated Access Backhaul

IP: Internet Protocol

ISP: Internet Service Provider

LTE: Long Term Evolution

MIMO: Massive Input Massive Output

MNO: Mobile Network Operator

MTIE: Maximum time interval error

NR: New Radio

OAS: Over-the-Air Synchronization

OPEX: Operating Expenditure

O-RAN: Open Radio Access Network

PDU: Protocol Data Unit

PDV: Packet Delay Variation

PRTC: Primary Reference Time Clock

PTP: Precision Time Protocol

QoS: Quality of Service

RAN: Radio Access Network

RF: Radio Frequency

RU: Radio Unit

SecGW: Secure Gateway

SLA: Service-Level Agreement

SLS: Service-Level Specification

SMF: Session Management Control Function

SyncE: Synchronous Ethernet

UE: User Equipment

UPF: User-Plane Function

VNF: Virtual Network Function

VPN: Virtual Private Network

WAN: Wide Area Network

Endnotes

1 https://www.5gamericas.org/resources/charts-statistics/?gclid=Cj0KCQjwxYOiBhC9ARIsANiElfbajH9dFdpn49CZXz9ta_f-t-RyCMI7338xS-MEYEH-CQvuEdJOpxoaAqoWEALw_wcB

2 https://www.ericsson.com/en/reports-and-papers/mobility-report

3 https://www.smallcellforum.org/calculator/

4 O-RAN Alliance

Acknowledgements

5G Americas' Mission Statement: 5G Americas facilitates and advocates for the advancement and transformation of 5G and beyond throughout the Americas.

5G Americas' Board of Governors members include Airspan Networks, Antel, AT&T, Cable & Wireless, Ciena, Cisco, Crown Castle, Ericsson, Liberty Latin America, Mavenir, Nokia, Qualcomm Incorporated, Rogers Communications Inc., Samsung, T-Mobile USA, Inc., Telefónica, VMware and WOM.

5G Americas would like to recognize the significant project leadership and important contributions of group leader David Krauss, Principal Network Architect, Ciena along with many representatives from member companies on 5G Americas' Board of Governors who participated in the development of this white paper.

The contents of this document reflect the research, analysis, and conclusions of 5G Americas and may not necessarily represent the comprehensive opinions and individual viewpoints of each particular 5G Americas member company. 5G Americas provides this document and the information contained herein for informational purposes only, for use at your sole risk. 5G Americas assumes no responsibility for errors or omissions in this document. This document is subject to revision or removal at any time without notice. No representations or warranties (whether expressed or implied) are made by 5G Americas and 5G Americas is not liable for and hereby disclaims any direct, indirect, punitive, special, incidental, consequential, or exemplary damages arising out of or in connection with the use of this document and any information contained in this document.

© Copyright 2023 5G Americas