Amendment to MEF 22.3

Transport Services for 5G Mobile Networks

Working Draft 12

June 2019

© MEF Forum 2019. Any reproduction of this document, or any portion thereof, shall contain the following statement: "Reproduced with permission of MEF Forum." No user of this document is authorized to modify any of the information contained herein.

Disclaimer

The information in this publication is freely available for reproduction and use by any recipient and is believed to be accurate as of its publication date. Such information is subject to change without notice and MEF Forum (MEF) is not responsible for any errors. MEF does not assume responsibility to update or correct any information in this publication. No representation or warranty, expressed or implied, is made by MEF concerning the completeness, accuracy, or applicability of any information contained herein and no liability of any kind shall be assumed by MEF as a result of reliance upon such information.

The information contained herein is intended to be used without modification by the recipient or user of this document. MEF is not responsible or liable for any modifications to this document made by any other party.

The receipt or any use of this document or its contents does not in any way create, by implication or otherwise:

(a) any express or implied license or right to or under any patent, copyright, trademark or trade secret rights held or claimed by any MEF member which are or might be associated with the ideas, techniques, concepts or expressions contained herein; nor

(b) any warranty or representation that any MEF member will announce any product(s) and/or service(s) related thereto, or if such announcements are made, that such announced product(s) and/or service(s) embody any or all of the ideas, technologies, or concepts contained herein; nor

(c) any form of relationship between any MEF member and the recipient or user of this document.

Implementation or use of specific MEF standards or recommendations and MEF specifications will be voluntary, and no Member shall be obliged to implement them by virtue of participation in MEF Forum. MEF is a non-profit international organization to enable the development and worldwide adoption of agile, assured and orchestrated network services. MEF does not, expressly or otherwise, endorse or promote any specific products or services.

© MEF Forum 2019. All Rights Reserved

© MEF Forum 2019. Any reproduction of this document, or any portion thereof, shall contain the following statement: "Reproduced with permission of MEF Forum." No user of this document is authorized to modify any of the information contained herein.

Table of Contents

1. List of Contributing Members 1

2. Abstract 2

3. Changes to section 2 of MEF 22.3 ("Abstract") 3

4. Changes to section 3 of MEF 22.3 ("Terminology") 4

5. Changes to section 4 ("Introduction") of MEF 22.3 6

6. Changes to section 5 ("Mobile Network Topologies") of MEF 22.3 7

7. Changes to section 6 ("Scope") of MEF 22.3 9

8. Changes to section 7 ("Compliance Levels") of MEF 22.3 10

9. Added Section ("Mobile Fronthaul Service Model") to MEF 22.3 11

10. Changes to section 11 (now section 12 – "UNI Requirements") of MEF 22.3 17

11. Changes to section 13 (now section 14 – "Synchronization") of MEF 22.3 19

12. Changes to section "References" of MEF 22.3 20

13. Add new Appendix ("F") 21

Rebuild ToC upon insertion/rollup of this amendment.

List of Figures

Amendment Figure 1 – High-Level RAN Architecture 6

Amendment Figure 2 – Generic 5G Migration Strategies 7

Amendment Figure 3 – 5G RAN Base Station Functional Blocks and Split Options 12

Amendment Figure 4 – Some Options For the gNB Functional Separation 13

Amendment Figure 5 – Mobile Fronthaul Example – All traffic with MEF 6.2 EPL Service across CEN 14

© MEF Forum 2018. Any reproduction of this document, or any portion thereof, shall contain the following statement: "Reproduced with permission of MEF Forum." No user of this document is authorized to modify any of the information contained herein.

Amendment Figure 6 – Ethernet Private Line (EPL) Services 15

Amendment Figure 7 – Ethernet Virtual Private Line (EVPL) Service 16

Amendment Figure 8 – Transport network slicing .....**Error! Bookmark not defined.**

Amendment Figure 9 – 1:N or 1:1 EVC to mobile network slice mapping 21

Rebuild LoF upon insertion/rollup of this amendment.

© MEF Forum 2018. Any reproduction of this document, or any portion thereof, shall contain the following statement: "Reproduced with permission of MEF Forum." No user of this document is authorized to modify any of the information contained herein.

1. List of Contributing Members

The following members of MEF participated in the development of this amendment and have requested to be included in this list.

TBD

© MEF Forum 2018. Any reproduction of this document, or any portion thereof, shall contain the following statement: "Reproduced with permission of MEF Forum." No user of this document is authorized to modify any of the information contained herein.

2. Abstract

This amendment specifies changes to the baseline document (MEF 22.3) to include the requirements for Ethernet Services that can be used as transport for 5G mobile networks. The services and requirements in this document are based on the services defined in MEF 6.2 [3], MEF 33[27] and MEF 51 [30] as well as the attributes in MEF 10.3 [7], MEF 26.2 [24] and this document. The aim is to support a wide range of 5G mobile network deployments that use Ethernet Services for transport.

This amendment makes the following changes to MEF 22.3: incorporation of Fronthaul and description of Network Slicing applicability.

Note that the changes in this document are given as "editing instructions." To be clear, when inserting a new section (such as section 9) the existing section 9 in MEF 22.3 will be renumbered as section 10, etc.. When this occurs, subsequent changes refer to sections as they would be renumbered.

Subsequent sections are of a form suitable for describing the changes incorporated in this amendment.

© MEF Forum 2018. Any reproduction of this document, or any portion thereof, shall contain the following statement: "Reproduced with permission of MEF Forum." No user of this document is authorized to modify any of the information contained herein.

3. Changes to section 2 of MEF 22.3 ("Abstract")

Replace the first sentence with the following:

"This document identifies the requirements for MEF Ethernet Services and MEF External Interfaces (EIs such as User-Network Interface (UNI)s) for use in Transport Services for 5G Mobile Networks based on MEF specifications."

Replace the third sentence with the following:

"The services and requirements in this document are based on the services defined in MEF 6.2 [3], MEF 33[27] and MEF 51 [30] as well as the attributes in MEF 10.3 [7], MEF 26.2 [24] and this document."'

© MEF Forum 2018. Any reproduction of this document, or any portion thereof, shall contain the following statement: "Reproduced with permission of MEF Forum." No user of this document is authorized to modify any of the information contained herein.

4. Changes to section 3 of MEF 22.3 ("Terminology")

Change the section Title ("Terminology") to "Terminology and Abbreviations."

Add (in alphabetical order) to, or modify the corresponding entries to the "Terminology" Table as shown below:

Term	Definition	Reference
5GC	5G Core	3GPP TS 38.300 [94]
BBU	Base-Band Unit	3GPP TS 38.300 [94]
CPRI	Common Public Radio Interface	CPRI [113]
CU	Centralized Unit	3GPP TS 38.300 [94]
DU	Distributed Unit	3GPP TS 38.300 [94]
eCPRI	A version of CPRI (the "e" has no specific meaning) – see the eCPRI reference.	eCPRI [114]
eNB, eNodeB	Evolved Universal Terrestrial Radio Access Network (E-UTRAN) Node B is the RAN Base Station in LTE. Also referred to as eNodeB or eNB. In this document an eNodeB is one of the options for a RAN BS	3GPP TS 36.300 [88]
EPC	Evolved Packet Core	3GPP TS 38.300 [94]
F1	A 3GPP interface for the higher layer split defined in 3GPP TS 38.401	3GPP TS 38.401 [95]
Fronthaul	A connection from the RAN CU to a RAN DU and remote radio unit. Typically, the connection is for transport of CPRI (or eCPRI)	This Document
gNB, gNodeB	Next Generation distributable NodeB	3GPP TS 38.300 [94]
HLS	High-Level Split	3GPP TS 38.300 [94]
LLS	Low-Level Split	3GPP TS 38.300 [94]
MFHS	Mobile Fronthaul Service; also Fronthaul	This Document
NFV	Network Function Virtualization as defined by ETSI and included in MEF 55	MEF 55
NR	New Radio – the air interface defined for 5G by 3GPP	3GPP TS 38.300 [94]
RAN CU	RAN Centralized Unit	3GPP TS 38.300 [94]
RAN DU	RAN Distributed Unit	3GPP TS 38.300 [94]
RE	CPRI Radio Equipment	CPRI [113]
RRU	Remote Radio Unit	3GPP TS 38.300 [94]
eRE	eCPRI Radio Equipment	eCPRI [114]
REC	CPRI Radio Equipment Control	CPRI [113]
eREC	eCPRI Radio Equipment Control	eCPRI [114]
NB, NodeB	WCDMA RAN Base Station. In this Document a NodeB is one of the options for a RAN BS	3GPP TS 21.905 [70]
RBS	RAN Base Station defined in thisDocument and referred generally as Base Station in 3GPP TS 21.905	This Document

Table 1: Terminology and Abbreviations

© MEF Forum 2018. Any reproduction of this document, or any portion thereof, shall contain the following statement: "Reproduced with permission of MEF Forum." No user of this document is authorized to modify any of the information contained herein.

Change the Table Caption for this table in MEF 22.3 from "Terminology" to "Terminology and Abbreviations."

In addition: Replace every occurrence of the phrase "Radio Base Station" in MEF 22.3 with "RAN Base Station" – preserving case where applicable.

© MEF Forum 2018. Any reproduction of this document, or any portion thereof, shall contain the following statement: "Reproduced with permission of MEF Forum." No user of this document is authorized to modify any of the information contained herein.

5. Changes to section 4 ("Introduction") of MEF 22.3

Add the following paragraph prior to Figure 1 of MEF 22.3 – "Mobile Backhaul, Midhaul and Fronthaul" and replace Figure 1 with Amendment Figure 1.

Release 15 of 3GPP's mobile technology [94], known as "Fifth Generation" or "5G," introduces several changes and new architectural alternatives for the evolution of mobile networks. For example, the 5G Base Station's Base Band processing block has been decomposed into Centralized and Distributed Units (CU and DU), which need not be co-located with the Radio Unit (RU). From a transport point of view this decomposition and separation of functions introduces new optional connections commonly called "Fronthaul", which can utilize bridged Ethernet networks.

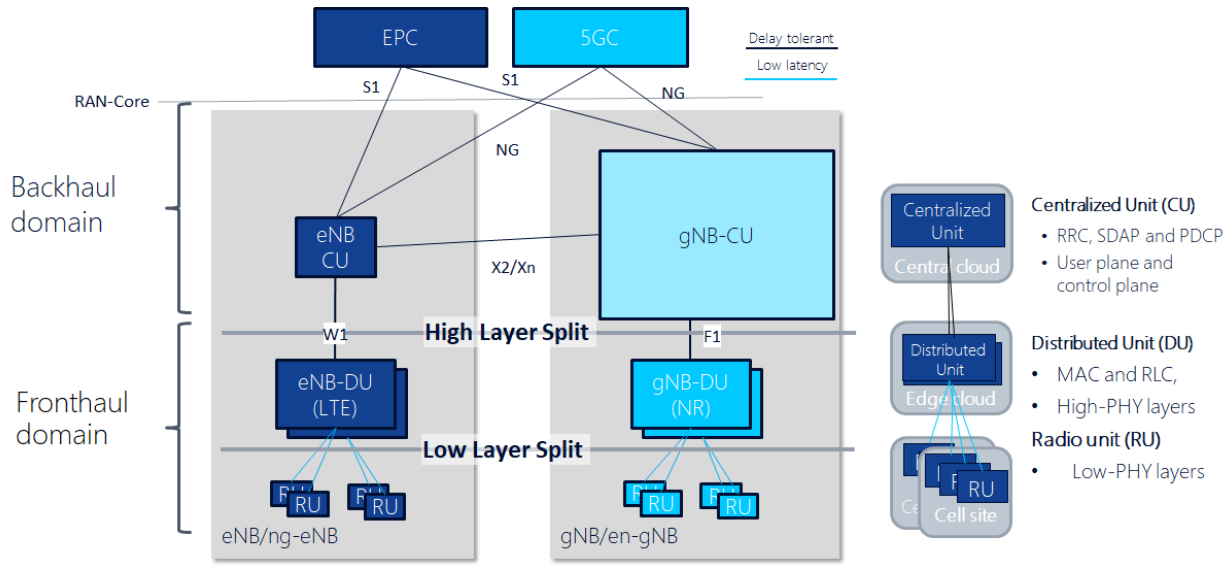

Amendment Figure 1 – High-Level RAN Architecture

© MEF Forum 2018. Any reproduction of this document, or any portion thereof, shall contain the following statement: "Reproduced with permission of MEF Forum." No user of this document is authorized to modify any of the information contained herein.

6. Changes to section 5 ("Mobile Network Topologies") of MEF 22.3

Add the following text and figure(s) at the end of the text introducing section 5:

The evolution to 5G NR has been driven by operators and vendors to meet a variety of diverse market requirements and deployment scenarios, including the seamless evolution of currently-deployed LTE solutions, which helps satisfy the need for global coverage early in the 5G deployment phase. As a result, 3GPP has defined several options for using LTE and 5G NR radios together with LTE core, a.k.a. Enhanced Packet Core (EPC), and with the new 5G Core (5GC). Among these options, Options 2 and 3X are preferred as illustrated inAmendment Figure 2 (where solid lines are for user plane traffic and dashed lines are for control plane traffic).

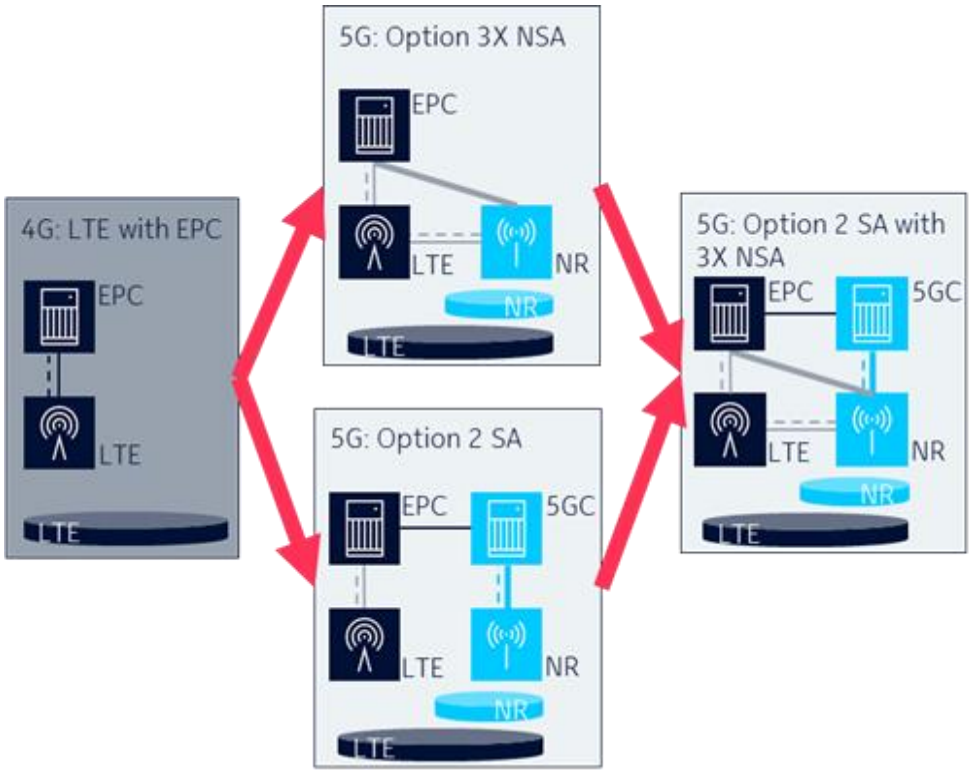

Amendment Figure 2 – 4G-to-5G Migration Options

Early 5G devices and networks might use Non-Standalone (NSA) Option 3X (5G NR connected to the existing EPC) for deployment speed and service continuity, leveraging LTE coverage. Option 3X uses dual connectivity between LTE and 5G radios to achieve data rate aggregation. With Option 3X, 5G NR is connected as a secondary node to the EPC which allows enhanced mobile broadband services on 5G-enabled devices while maintaining 4G EPC services. Option 3X also relies on the LTE radio for all control plane signaling and wide area coverage.

The next distinct phase of 5G deployment will follow the completion of the Standalone (SA) core network specifications, using the Option 2 architecture which attaches 5G NR to the new 5G Core. This allows full support for new value creating services and advanced network slicing.

© MEF Forum 2018. Any reproduction of this document, or any portion thereof, shall contain the following statement: "Reproduced with permission of MEF Forum." No user of this document is authorized to modify any of the information contained herein.

Option 2 (with or without 3X NSA support) is therefore widely seen as the long-term target architecture.

The Option 2 solution uses 5G NR for data and for control plane signaling and requires a 5G low-frequency band for wide area coverage as it cannot utilize the LTE layer as in Option 3X.

Options 2 and 3X are preferred by the industry, other 3GPP options (known as Options 4, 5 and 7) may have some benefits in special deployments.

Add the following as section (5.4) "Network Slicing" at the end of section 5:

Network Slicing

3GPP defined Network slicing is a key RAN capability that enables flexibility, as it allows multiple logical networks to be created on top of a common shared physical infrastructure. The 5G transport network can use a shared physical infrastructure that could be used in many possible ways.

For the purposes of this document, Network Slicing is a RAN construction defined by 3GPP. This document considers that support for Network Slicing in a CEN service can be accomplished using Ethernet services already defined, combined with best fit CoS and other service attributes.

To support a Network Slice (as defined by RAN context) using an Ethernet service, it is necessary to provide a mapping from a RAN Network Slice Identifier to a corresponding EVC+CoS – i.e – RAN Network Slice data needs to be presented at the UNI using an appropriate C-TAG (VID+PCP) in an Ethernet Frame.

The precise CoS and other service attribute values associated with the EVC+CoS will depend on specific subscriber applications and deployments and are yet undetermined.

For information, an example is provided in Appendix F.

© MEF Forum 2018. Any reproduction of this document, or any portion thereof, shall contain the following statement: "Reproduced with permission of MEF Forum." No user of this document is authorized to modify any of the information contained herein.

7. Changes to section 6 ("Scope") of MEF 22.3

In section 6.1 ("In Scope"), the following Notes, changes/modifications apply.

Amendment Editor's note: The list below is intended to literally replace the existing text listing what was "in scope" for MEF 22.3. Underlined text represents the actual changes as compared to the list in 22.3 as it is now.

Modify the "In Scope" content to reflect the list below, and remove underlining used to distinguish new or modified text:

The following work items are within the scope of this phase of this Document:

- Mobile backhaul and midhaul, for macro and small cells, for mobile technologies referenced in standards: GSM, WCDMA, CDMA2000, WiMAX 802.16e, LTE/LTE-A <u>and 5G</u>.
- <u>Mobile fronthaul (e.g. CPRI/eCPRI) for mobile technologies referenced in standards: LTE/ LTE-A and 5G</u>.
- Support a single CEN with External Interfaces being only UNIs for Mobile Backhaul between RAN BSs and RAN NC <u>or RAN CU</u>.
- <u>Support a single CEN with External Interfaces being only UNIs for Mobile Fronthaul between RAN DUs and RAN CUs</u>.
- <u>Support a single CEN with External Interfaces being only UNIs for Mobile Fronthaul between eRE/RE and eREC/REC.</u>
- Include Multiple CENs based on OVC Service Definitions
- Utilize existing MEF technical specifications with required extensions to interface and service attributes.
- Provide requirements for UNI-C and UNI-N beyond those in MEF 13 [12] and MEF 20 [17].
- Provide requirements for ENNI beyond those in MEF 51 [30].
- Define requirements for Mobile Backhaul <u>and Mobile Fronthaul</u> with Ethernet Services specified in MEF 6.2 [3], MEF 33 [27], and MEF 51[30].
- Provide requirements for Link OAM, Service OAM Fault Management.
- Provide requirements for Class of Service and recommend performance objectives consistent with MEF 23.2 [20], where possible.
- Provide requirements in support of network slicing for 5G
- Specify frequency synchronization requirements where possible for packet-based synchronization methods and Synchronous Ethernet.
- Specify time and phase synchronization methods and requirements.
- Define functional requirements applicable to Generic Inter-Working Function interfaces.
- Specify resiliency related performance requirements for Mobile Backhaul and Fronthaul.

© MEF Forum 2018. Any reproduction of this document, or any portion thereof, shall contain the following statement: "Reproduced with permission of MEF Forum." No user of this document is authorized to modify any of the information contained herein.

8. Changes to section 7 (“Compliance Levels”) of MEF 22.3

Modify the first paragraph in the section as shown (adding BCP 14 and RFC 8174 references):

The key words "**MUST**", "**MUST NOT**", "**REQUIRED**", "**SHALL**", "**SHALL NOT**", "**SHOULD**", "**SHOULD NOT**", "**RECOMMENDED**", "**MAY**", and "**OPTIONAL**" in this document are to be interpreted as described in BCP 14 (IETF RFC 2119 [99] and RFC 8174 0 when, and only when, they appear in all capital letters, as shown here. All key words must also be in bold text.

© MEF Forum 2018. Any reproduction of this document, or any portion thereof, shall contain the following statement: "Reproduced with permission of MEF Forum." No user of this document is authorized to modify any of the information contained herein.

9. Added Section ("Mobile Fronthaul Service Model") to MEF 22.3

Add the following text as Section 9 - "Mobile Fronthaul Service Model" (Apply - but do not include - Amendment editorial notes) after current section 8 ("Mobile Backhaul Service Model") <u>and renumber subsequent sections and subsections</u> (this should happen automatically):

Mobile Fronthaul Service Model

This section includes: a description of a Mobile Fronthaul reference model; definitions of reference points and functional elements; and, use cases that reflect possible Mobile Fronthaul deployments.

A Mobile Fronthaul network can take on many forms depending on factors such as transport technology, mobile standard, operator preference, etc. This Section of this Document focuses on the Mobile Fronthaul network between disaggregated elements of a RAN Base Station and Radio Antenna sites. The Mobile Fronthaul Service (MFHS) is between demarcation points separating the responsibility of a Service Provider (SP) or CEN Operator's domain and the Mobile Operator's domain, see for example Amendment Figure 5. This is the CEN supporting MEF 6.2 Services [3] between UNI reference points.

Functional blocks and internal interfaces of RAN Base Station

Until Release 15, 3GPP had treated the cellular Base Station as one functional block without any definitions of its internal architecture or interfaces. During development of Release 15 a study was conducted to evaluate various options for a functional splits and related interfaces to enable physical separation of the gNB functions. Amendment Figure 3 shows the 8 options covered in that study.

The 3GPP study concluded that Option 2 would be used for the High Layer Split (HLS). As shown in Amendment Figure 3, Options 7 and 8 correspond to the use of eCPRI and CPRI, respectively.

© MEF Forum 2018. Any reproduction of this document, or any portion thereof, shall contain the following statement: "Reproduced with permission of MEF Forum." No user of this document is authorized to modify any of the information contained herein.

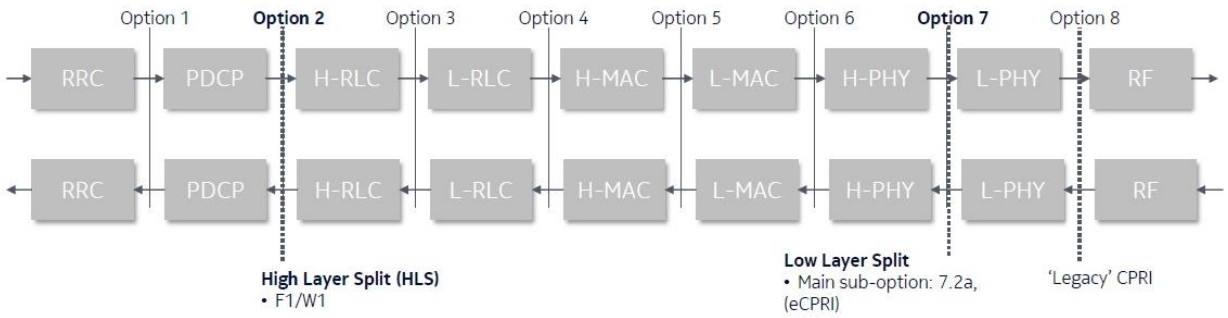

Amendment Figure 3 – 5G RAN Base Station Functional Blocks and Split Options (Adapted from – "NGMN Overview on 5G RAN Functional Decomposition" [110])

For High Layer split option 2 the corresponding logical interfaces are F1 for NR and W1 for LTE. As Amendment Figure 3 above (adapted from "NGMN Overview on 5G RAN Functional Decomposition" – [110] shows, the new Low Layer Split interface eCPRI specified by CPRI cooperation with split option 7, and the legacy CPRI interface (in split 8), which has been in use in Remote Radio Head deployments.

A Mobile Fronthaul network provides connectivity at the Option 2 (F1/W1), Option 7 (eCPRI), or Option 8 (legacy CPRI) split points.

The interfaces for High and Low layer splits differ in several aspects such as:

- Bandwidth requirements
- Latency tolerance
- Functionality and complexity of the Radio Unit

High layer split (option 2) requires less bandwidth and tolerates higher latency than the low layer splits (options 7 and 8).

Low layer splits benefit from simpler and cost efficient RUs and offer better possibilities for centralized aggregation and capacity integration.

Logical separation of the gNB functional entities and the corresponding fronthaul interface give operators new possibilities to place the functions in separate physical locations according to their priorities. Amendment Figure 4 (extracted from "NGMN Overview on 5G RAN Functional Decomposition" – [110]) presents several options on placing the functions between cell site, aggregation site traditionally used for transport aggregation, and edge site, which is the most central site of the RAN. Selection between the options is dependent on several factors like transport network topology, availability of sites, latency and capacity limitations and computing resource availability.

© MEF Forum 2018. Any reproduction of this document, or any portion thereof, shall contain the following statement: "Reproduced with permission of MEF Forum." No user of this document is authorized to modify any of the information contained herein.

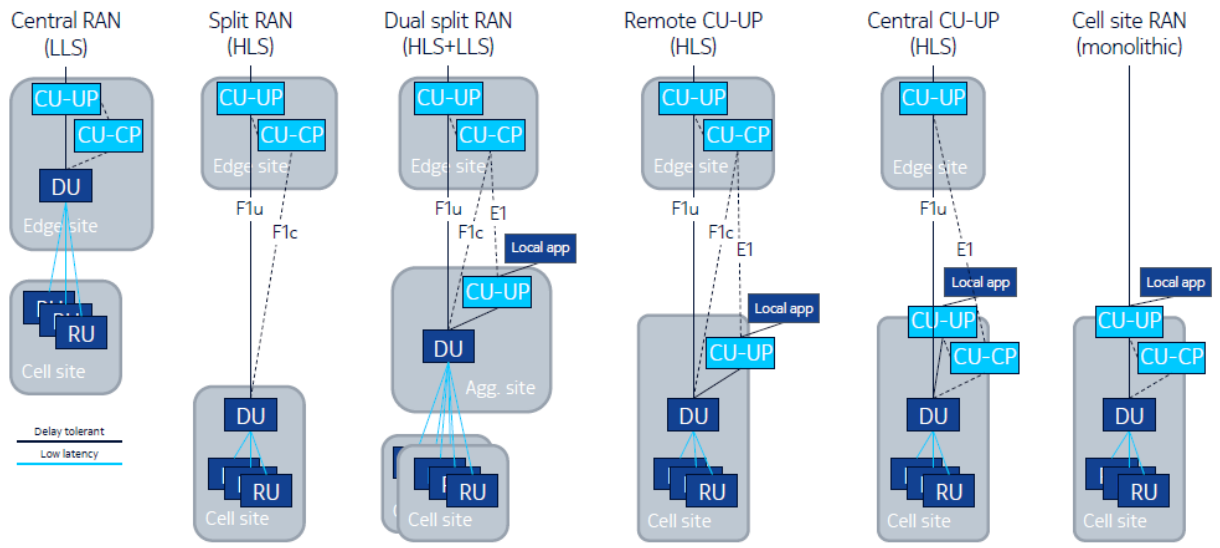

Amendment Figure 4 – Some Options For the gNB Functional Separation
(Source – "NGMN Overview on 5G RAN Functional Decomposition" [110])

Service Model Use Case

The functional split options in Amendment Figure 3 imply a potential deployment scenario using MEF services. Although the corresponding use cases are not necessarily representative of all possible deployment scenarios, they are the foundation of this Document for Mobile Fronthaul. The focus of this Document for Mobile Fronthaul is to recommend capabilities at the UNI and applicable Ethernet Services in support of Mobile Fronthaul; referencing MEF specifications and specifying extensions when necessary.

Amendment Figure 5, shows an example where all traffic uses MEF 6.2 EPL service [3] across the CEN. How the Ethernet services are realized can vary depending on the mobile technology that is deployed, vendor equipment, operator requirements, and the of Service types offered by the CEN.

© MEF Forum 2018. Any reproduction of this document, or any portion thereof, shall contain the following statement: "Reproduced with permission of MEF Forum." No user of this document is authorized to modify any of the information contained herein.

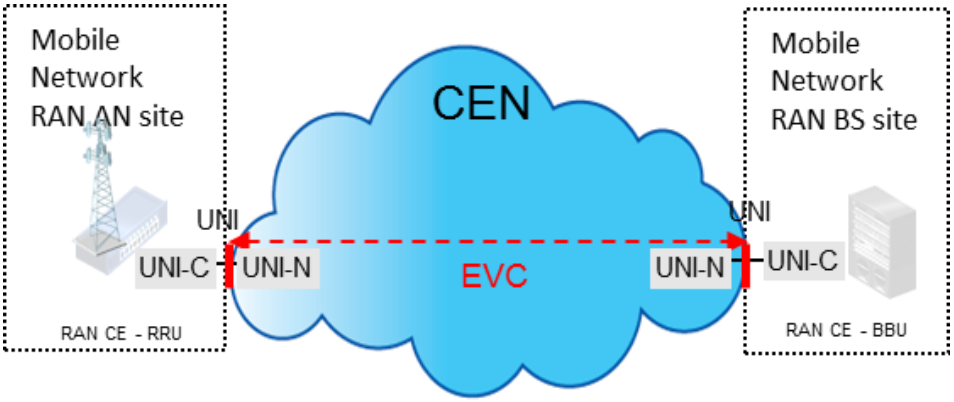

Amendment Figure 5 – Mobile Fronthaul Example – All traffic with MEF 6.2 EPL Service across CEN

Applying Ethernet Service Definitions to Mobile Fronthaul

This section specifies the Mobile Fronthaul Ethernet services. This Document specifies requirements using:

- The baseline definition of MEF Services in MEF 6.2 [3],
- Service attributes defined in MEF 10.3 [7], MEF 23.2 [20],
- Additional attributes defined in this Document.

Ammendment Editor's Note: This document uses MEF 6.2 and MEF 10.3 (verses more current references) to be consistent with MEF 22.3. In addition, the sections referred to in these requirements are as renumbered (after inclusion of new section 9).

[Amendment R1] The Mobile Fronthaul Service Provider **MUST** support Ethernet Private Line Service as defined in MEF 6.2 [3], in addition to the attributes specified in this document (see Section 12.7.1 and Section 13.5.1)

Use of an Ethernet Private Line service is particularly useful in meeting low latency requirements for the Lower Level Splits (LLS) for transport of eCPRI and/or CPRI.

[Amendment CR1] In supporting the above requirement, the Mobile Fronthaul Service (or Service Provider) **MUST** meet the mandatory requirements of MEF 6.2 that apply to service types of a given Mobile Fronthaul Ethernet service

[Amendment D1] The Mobile Fronthaul Service Provider SHOULD support Ethernet Virtual Private Line Services as defined in MEF 6.2 [3], in addition to the attributes specified in this Document (see Section 12.7.1 and Section 13.5.1)

© MEF Forum 2018. Any reproduction of this document, or any portion thereof, shall contain the following statement: "Reproduced with permission of MEF Forum." No user of this document is authorized to modify any of the information contained herein.

Note: Support for multipoint mobile fronthaul services is for further study.

Amendment Editor's note: Section numbering included below should be as correctly renumbered on applying this section addition (i.e. - section 9 of MEF 22.3 becomes section 10, section 10 becomes section 11, etc.); refer to section names for verification.

See Section 12.7 (UNI Service Attributes) and Section 13.5 (Per Uni and Per EVC Service Attributes) as well as other constraints, if any, as defined in this document.

Ethernet Private Line Service

The Ethernet Private Line (EPL) service (MEF 6.2 [3]) is a port-based service with exactly 2 UNIs in an EVC. It is equivalent to the leased line service used for MFHS between the RAN CU and RAN DU. All untagged, priority tagged and tagged Service Frames are mapped to 1 EVC at the UNI. The EPL service might be preferred in cases where there is a desire for a 1:1 port level correspondence between the RAN CU and each RAN DU UNI as shown in Amendment Figure 6. Port based EPL services with dedicated UNI ports at RAN CU for every DU might not be a scalable model.

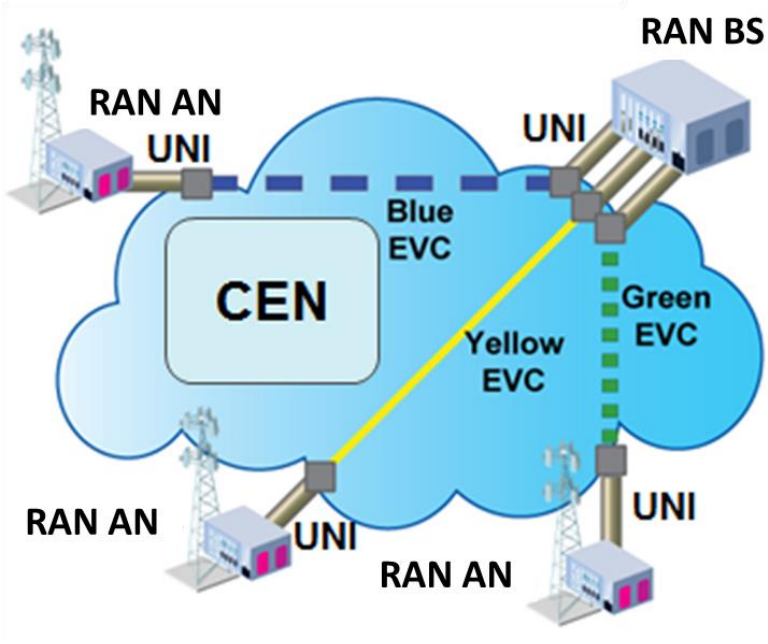

Amendment Figure 6 – Ethernet Private Line (EPL) Services

Ethernet Virtual Private Line Service

The Ethernet Virtual Private Line (EVPL) service (MEF 6.2 [3]) for Mobile Fronthaul is a VLAN based service with exactly 2 UNIs in an EVC and is used to access multiple RAN sites with Service Multiplexing (>1 EVC) at either a RAN DU UNI or CU UNI. This allows efficient use of the RAN CU UNI, as illustrated in Amendment Figure 7. The CE-VLAN ID to EVC map

© MEF Forum 2018. Any reproduction of this document, or any portion thereof, shall contain the following statement: "Reproduced with permission of MEF Forum." No user of this document is authorized to modify any of the information contained herein.

and Bundling service attributes (MEF 10.3 [7]) are used to identify the set of CE-VLANs, including untagged and priority tagged Service Frames, which map to specific EVCs at the UNI. At the RAN CU UNI, for example, if there is an EVC per RAN DU then there is an upper bound of 4094[1] RAN DUs, assuming 1 CE-VLAN ID per RAN DU.

Note that practical considerations, such as the additional bandwidth requirements associated with 5G, might limit the need for support of numbers of EVC to a (possibly significantly) lower number than this upper bound.

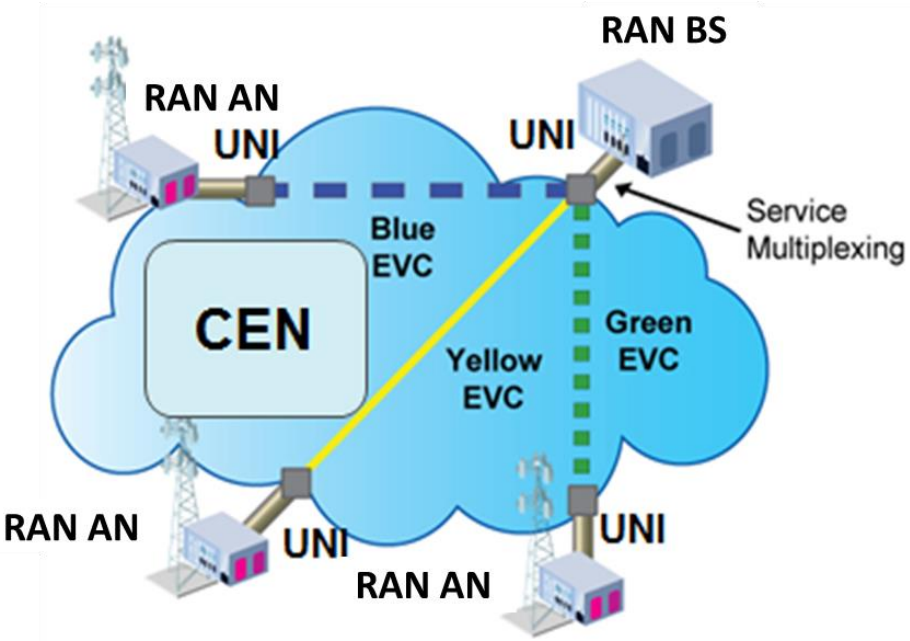

Amendment Figure 7 – Ethernet Virtual Private Line (EVPL) Service

Note: for additional requirements that might apply specifically to a Mobile Fronthaul Service, see eCPRI Transport Network [115] - in particular to the “Requirements” section (section 4 of the referenced version).

[1] As mentioned in MEF 10.3 [7] section 9.9, note that the Customer VLAN Tag values 0 and 4095 in IEEE Std 802.1Q [32] are reserved for special purposes.

© MEF Forum 2018. Any reproduction of this document, or any portion thereof, shall contain the following statement: "Reproduced with permission of MEF Forum." No user of this document is authorized to modify any of the information contained herein.

10. Changes to section 11 (now section 12 – "UNI Requirements") of MEF 22.3

Add "MBH" immediately prior to "Services" in requirements [R13], [D3] and [O5].

Add the following text and Requirements to section 12.1 "UNI Scalability"

UNI Scalability

[Amendment D2] The CEN operator **SHOULD** support minimum number of EVCs per MEF 13 [12] at a RAN CU UNI for VLAN based Mobile Fronthaul Services.

[Amendment D3] The CEN operator SHOULD support a minimum Bandwidth of 10 GE at a RAN CU and DU UNI.

© MEF Forum 2018. Any reproduction of this document, or any portion thereof, shall contain the following statement: "Reproduced with permission of MEF Forum." No user of this document is authorized to modify any of the information contained herein.

Add the following paragraph at the end of section 12.1 "UNI Scalability"

10 GE is very likely to be expected by Mobile Operators for 5G services supporting F1 interfaces..

© MEF Forum 2018. Any reproduction of this document, or any portion thereof, shall contain the following statement: "Reproduced with permission of MEF Forum." No user of this document is authorized to modify any of the information contained herein.

11. Changes to section 13 (now section 14 – "Synchronization") of MEF 22.3

Add the following row at the end of the Table "Mobile Technology Synchronization Requirements" (Note that this likely no longer Table 16, renumber as necessary).

Technology	Frequency Accuracy (ppb)	Phase Error (µs)	Reference Document
NR	+/-50 (Wide area); +/-100 (Medium Range/Local Area)	3 µs (NR TDD)	3GPP TS 38.104 3GPP TS 38.133

Table 16: Mobile Technology Synchronization Requirements

Add – immediately following the table referred to above – the following Note.

Note: See also ITU-T Recommendation G.8271 Tables 1, 2, II.1 and II.2 for further synchronization-related requirements that might apply.

© MEF Forum 2018. Any reproduction of this document, or any portion thereof, shall contain the following statement: "Reproduced with permission of MEF Forum." No user of this document is authorized to modify any of the information contained herein.

12. Changes to section "References" of MEF 22.3

Add the following at the end of the 3GPP references starting with reference [92] (renumber current 92 – 108 as 96 – 112)

[92] 3GPP TS 38.104 V15

[93] 3GPP TS 38.133 V15

[94] 3GPP TS 38.300 V15.3.0 (2018-09) "Technical Specification Group Radio Access Network; NR; NR and NG-RAN Overall Description"

[95] 3GPP TS 38.401 V15

Add the following at the end of the IETF (RFC) references [107] (renumber then subsequent references 108 – 112 as 109 – 113):

[107] RFC 8174, "Ambiguity of Uppercase vs Lowercase in RFC 2119 Key Words"

Add the following at the end of the NGMN Alliance references (as 110) and renumber subsequent references:

[110] NGMN Alliance, "NGMN Overview on 5G RAN Functional Decomposition" V 1.0, February 2018

Revise the current CPRI reference (renumbered reference [113] – previously [107] – to read as follows:

[113] CPRI, "Common Public Radio Interface (CPRI); Interface Specification V7.0", October 2015

Add the following as additional CPRI references [114] and [115], and renumber remaining reference (renumbered as 114, previously 108) as [116]:

[114] eCPRI V1.2, "Common Public Radio Interface: eCPRI Interface Specification", June 2018

[115] eCPRI Transport Network V1.2, "Common Public Radio Interface: Requirements for the eCPRI Transport Network", June 2018

Update renumbering of references throughout MEF 22.3 as described above. References explicitly made in this amendment should be correct as made.

© MEF Forum 2018. Any reproduction of this document, or any portion thereof, shall contain the following statement: "Reproduced with permission of MEF Forum." No user of this document is authorized to modify any of the information contained herein.

13. Add new Appendix ("F")

Add the following text and figure(s) as Appendix F (following last existing appendix).

Appendix F: Example CEN support for transport of RAN Network Slices

With 5G, 3GPP [TS 23.501] defines a network slice as a logical network that provides specific network capabilities and network characteristics. In the MEF, this logical network separation is provided with an EVC + CoS combination. This means that there can be a 1:1 or a 1:N relationship between the EVC (transport network slice) and a 5G RAN slice (mobile network slice) as illustrated in Amendment Figure . In either case the network slice instance will have some form of identifier (as specified by 3GPP), but only in the 1:1 relationship can that be mapped, along with its characteristics, to a single EVC. In many cases, the fronthaul network operator will not have visibility of the network slice traffic being offered by the 5G mobile operator. This would be the case if slices are aggregated on some basis. If it is not possible for the fronthaul operator to distinguish the network slice to which each offered frame belongs, the relation between the service and the network slices carried by the service, will then effectively be a 1:N relationship. This might be the case for fronthaul if there is no identification in this case.

Where the mapping of Network Slices to EVCs is on an N:1 basis (left side of Amendment Figure), information used between the mobile operator and fronthaul provider (e.g. – C-VID + PCP) to map network slices to EVCs might need to be preserved by the fronthaul service.

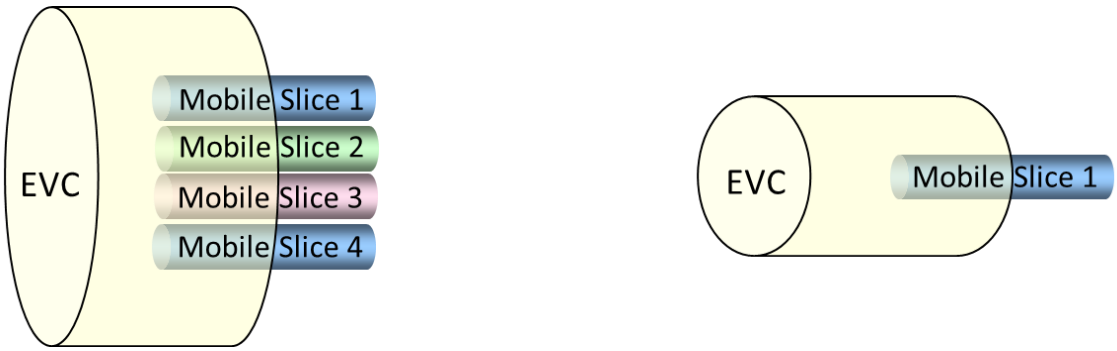

Amendment Figure 8 – 1:N or 1:1 EVC to mobile network slice mapping

© MEF Forum 2018. Any reproduction of this document, or any portion thereof, shall contain the following statement: "Reproduced with permission of MEF Forum." No user of this document is authorized to modify any of the information contained herein.