Table of Contents

Page

1. Scope 2

2. References 2

3. Definitions 2

3.1 Terms defined elsewhere 2

3.2 Terms defined in this Recommendation 3

4 Abbreviations and acronyms 3

5 Conventions 3

6 Introduction of UE-to-UE session using layer 3 / 2 functions and capabilities 4

7 High-level requirements of supporting UE-to-UE session management in future networks including IMT-2020 network 5

8 Architectural framework of supporting UE-to-UE session management in future networks including IMT-2020 network 5

9 Security considerations 6

Appendix I 7

Bibliography 9

Draft new Recommendation ITU-T Y.U2USM-req-fra

Future networks including IMT-2020 network: Requirements and framework for the support of UE-to-UE session management

Summary

This Recommendation specifies the requirements and framework for the support of UE-to-UE session management in future networks including IMT-2020 network.

Keyword

future networks; IMT-2020; UE-to-UE session management

1. Scope

This Recommendation specifies the requirements and framework for the support of UE-to-UE session management in future networks including IMT-2020 network.

The scope of this draft Recommendation includes:

– Introduction of UE-to-UE session using layer 3 / 2 functions and capabilities.

– High-level requirements of supporting UE-to-UE session management in future networks including IMT-2020 network.

– Architectural framework of supporting UE-to-UE session management in future networks including IMT-2020 network.

– Security considerations.

2. References

The following ITU-T Recommendations and other references contain provisions, which, through reference in this text, constitute provisions of this Recommendation. At the time of publication, the editions indicated were valid. All Recommendations and other references are subject to revision; users of this Recommendation are therefore encouraged to investigate the possibility of applying the most recent edition of the Recommendations and other references listed below. A list of the currently valid ITU-T Recommendations is regularly published.

The reference to a document within this Recommendation does not give it, as a stand-alone document, the status of a Recommendation.

[ITU-T Y.3101] Recommendation ITU-T Y.3101 (2018), *Requirements of the IMT-2020 network*

[ITU-T Y.3104] Recommendation ITU-T Y.3104 (2018), *Architecture of the IMT-2020 network*

[TBD]

3. Definitions

3.1 Terms defined elsewhere

This Recommendation uses the following terms defined elsewhere:

3.1.1 IMT-2020 [b-ITU-T Y.3100]: Systems, system components, and related technologies that provide far more enhanced capabilities than those described in [ITU-R M.1645].

3.1.2 PDU Session [b-ITU-T Y.3100]: In the context of IMT-2020, an association between a user equipment (UE) and a data network that provides a protocol data unit (PDU) connectivity service.

3.1.3 Session [b-ITU-T Y.2233]: Logical connection between parties involved in a packet-switched based communication.

NOTE – This term is used for packet-switched connections rather than the term "call" that is normally used for a connection over conventional (circuit-switched) systems. A session can be composed of one or more unidirectional and/or bidirectional flows.

[TBD]

3.2 Terms defined in this Recommendation

This Recommendation defines the following terms:

[TBD]

4 Abbreviations and acronyms

This Recommendation uses the following abbreviations and acronyms:

AF	Application Function
AN	Access Network
BBU	Baseband Unit
CP	Control Plane
GTP-U	General packet radio service Tunnelling Protocol User Plane
IMT-2020	International Mobile Telecommunication 2020
NACF	Network Access Control Function
PCF	Policy Control Function
PDU	Protocol Data Unit
QoS	Quality of Service
SLA	Service Level Agreement
SMF	Session Management Function
U2USMF	UE-to-UE Session Management Function
UE	User Equipment
UP	User Plane
UPF	User Plane Function
VN	Virtual Network

5 Conventions

In this Recommendation:

– The keywords “is required to” indicate a requirement which must be strictly followed and from which no deviation is permitted if conformance to this document is to be claimed.

– The keywords “is recommended” indicate a requirement which is recommended but which is not absolutely required. Thus, this requirement needs not be present to claim conformance.

– The keywords “can optionally” and “may” indicate an optional requirement which is permissible, without implying any sense of being recommended. These terms are not intended to imply that the vendor’s implementation must provide the option and the feature can be optionally enabled by the network operator/service provider. Rather, it means the vendor may optionally provide the feature and still claim conformance with the specification.

6 Introduction of UE-to-UE session using layer 3 / 2 functions and capabilities

In the digital era, more and more comprehensive and customized new service demands have been introduced to the operators’ infrastructure, these new demands have some new characteristics as follows:

- Latency guarantees.
- Reliable and consistent data throughput guarantees.
- Lossless packet forwarding guarantees.
- On-demand real-time communication service provisioning.

These new demands mainly come from e-Health monitoring services [b-ITU-T Y.2065], the telemedicine, telesurgery and the other peer-to-peer big data sharing scenarios, requiring dedicated network capabilities and resources to guarantee the latency and data throughput. In terms of the existing resource guarantee and accounting modes, the data usage based accounting mode is based on statistical multiplexing solutions, the monthly rental based resource guarantees are subject to high cost. Many organizations, especially the small and medium-sized ones, cannot afford or are not willing to pay for the guaranteed resources on a monthly rental basis. For the sake of these categories of subscribers, it is recommended to introduce a pay-as-allocation business model, provide and release the capabilities and resources as fast as possible upon specific communication service requests with flexible accounting based on the UE distance, the allocated resources and the service duration, so that the subscribers can initiate, modify and terminate a specific communication service anytime anywhere.

NOTE 1 – Some details on new service scenarios can be found in Appendix I.

To enable the pay-as-allocation business model, it is recommended to introduce an object on behalf of a specific communication service request, based on which the status of a specific service and corresponding network capability / resource mapping can be tracked and used for flexible accounting.

A UE-to-UE session can be used as the above-mentioned object.

NOTE 2 – In this draft Recommendation, the UE-to-UE session refers to a session which spans from a UE to another UE using layer 3 or layer 2 functions and capabilities, as depicted in Figure 1.

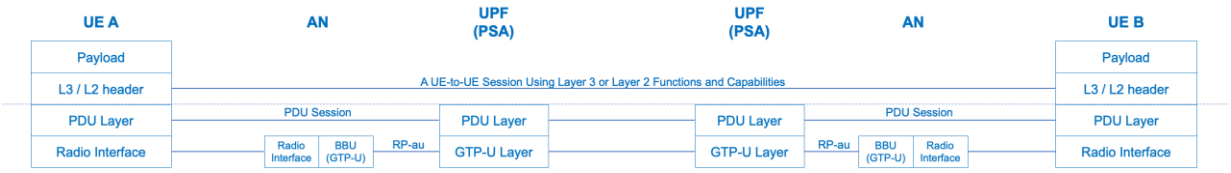

Figure 1 The overview of a UE-to-UE session

A UE-to-UE session has a per service granularity, which is decoupled from a PDU session and over it, while a PDU session has a per subscriber granularity. One subscriber can initiate one or more UE-to-UE sessions over the same PDU session. That is, when a UE-to-UE session is established, a corresponding dedicated QoS flow is simultaneously established in the PDU session for this UE-to-UE session, when the UE-to-UE session is modified or terminated, the corresponding dedicated QoS flow is simultaneously modified or deleted, while the PDU session keeps being established.

A UE-to-UE session can also be used in the inter-operator scenarios, as depicted in Figure 2.

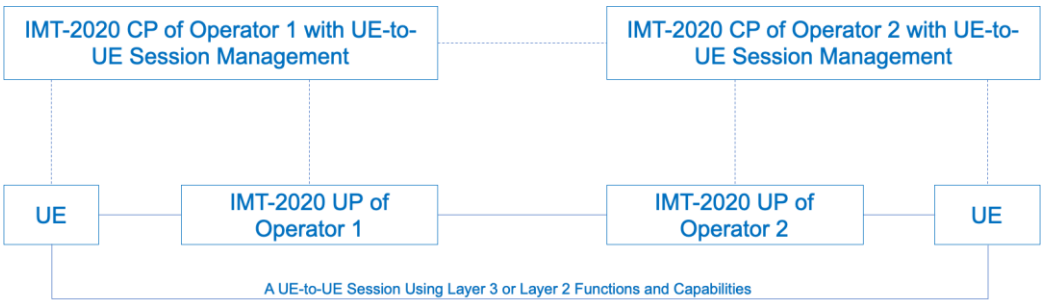

Figure 2 UE-to-UE session in the inter-operator scenario

A UE-to-UE session spanning 2 different operators can be negotiated via the peering interface between the IMT-2020 CPs of the 2 operators. Based on this mechanism, an operator can initiate the negotiation of a UE-to-UE session by sending a request to another operator and receiving its response without orchestrating any resource from any other operators.

Editors' note: more details will be provided later.

7 High-level requirements of supporting UE-to-UE session management in future networks including IMT-2020 network

Editors' note: more details will be provided later.

It is recommended to support the UE-to-UE session management related capabilities in the future networks including IMT-2020 network.

It is recommended to avoid affecting the existing signalling procedures.

8 Architectural framework of supporting UE-to-UE session management in future networks including IMT-2020 network

Editor's note: The figures and text below are provided as initial text for consideration (the inclusion of a new Network Function (including its formal name) as alternative to the extension of an existing network function, and any related reference points aspect).
The text and figures below have not been reviewed in detail. And contributions are invited.

To meet the UE-to-UE session management related requirements, it is recommended to introduce a new capability into the IMT-2020 CP. The new capability used for UE-to-UE session management is named as UE-to-UE session management function (U2USMF).

There are 2 options for the extensions of IMT-2020 CP.

1. *U2USMF as a new network function, as depicted in Figure 3*

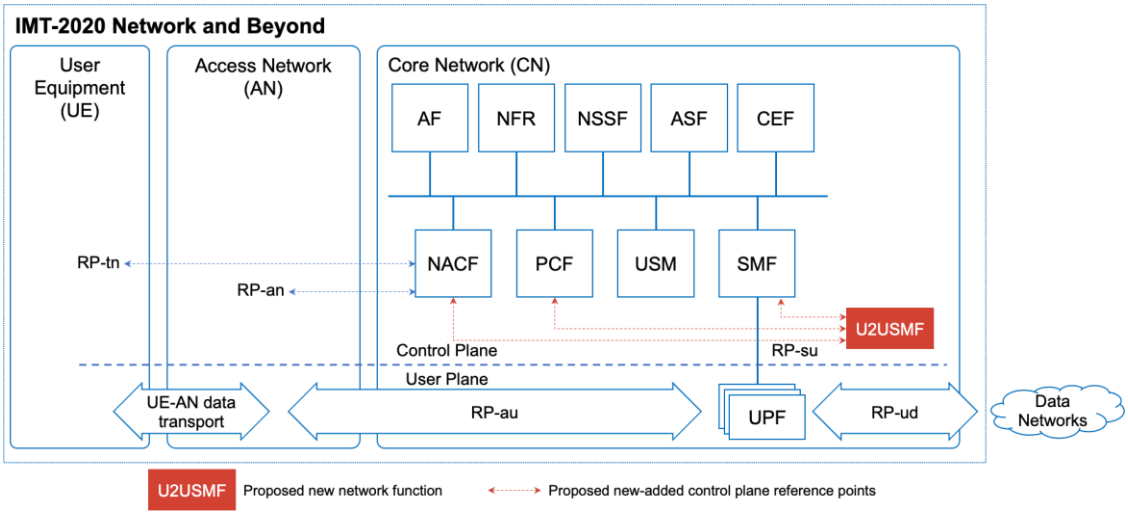

Figure 3 The architectural framework of supporting UE-to-UE session management in future networks including IMT-2020 network with a new network function

In this option, it is proposed to add new reference points as follows:

- *The reference point between the NACF and the U2USMF is used to relay the UE-to-UE session requests, responses and other related messages between a UE to the U2USMF. The U2USMF also sends the radio resource requests to the NACF via this reference point.*
- *The reference point between the SMF and the U2USMF is used to exchange the UPF resource guarantees related messages.*
- *The reference point between the PCF and the U2USMF is used to exchange the forwarding policies related messages. After the allocation of radio resources and UPF resources, the U2USMF sends requests to the PCF, the PCF generates corresponding forwarding policies and issues them to the AN and the UPF.*

2. U2USMF as an enhancement of the AF, as depicted in Figure 4

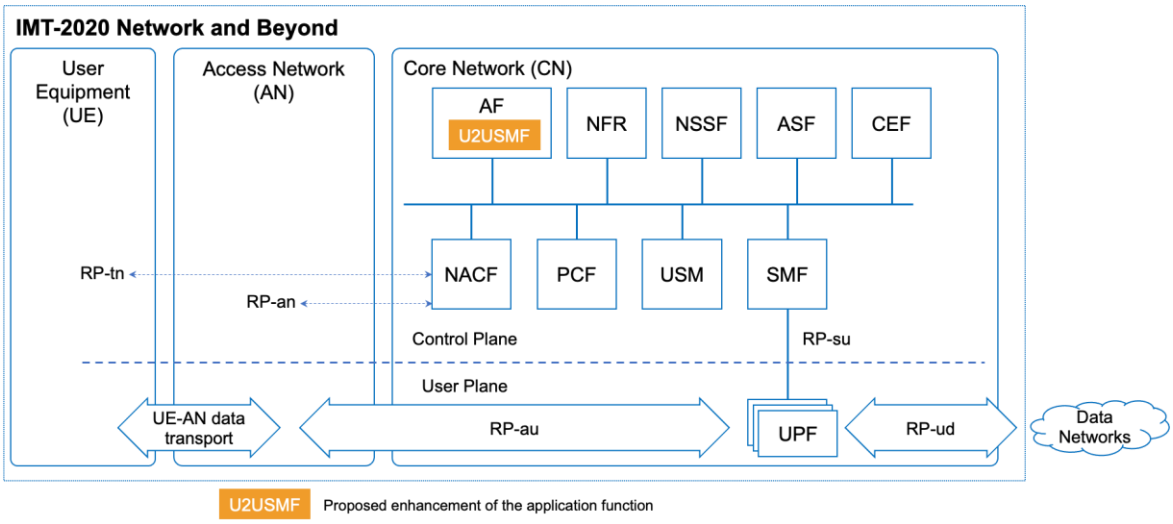

Figure 4 The architectural framework of supporting UE-to-UE session management in future networks including IMT-2020 network with the enhancement of AF

In this option, there is no new reference point to be added. It is recommended to support the interaction between the U2USMF and the NACF / SMF / PCF.

- *The UE-to-UE session requests, responses and other related messages between a UE to the U2USMF is relayed by the NACF. The U2USMF also sends the radio resource requests to the NACF via the reference point between the AF and the NACF.*
- *The U2USMF sends the UPF resource guarantees related messages to the UPF via the reference point between the AF and the SMF.*
- *The U2USMF exchange the forwarding policies related messages via the reference point between the AF and the PCF. After the allocation of radio resources and UPF resources, the U2USMF sends requests to the PCF, the PCF generates corresponding forwarding policies and issues them to the AN and the UPF.*

End of the Editor's note.

9 Security considerations

Editors' note: details will be provided later.

Appendix I

(This appendix does not form an integral part of this draft Recommendation.)

I.1 Telesurgery scenarios

The telesurgery scenarios are cited from [Qi Zhang, Jianhui Liu, and Guodong Zhao, "Towards 5G Enabled Tactile Robotic Telesurgery", *arXiv:1803.03586v1*, 9 Mar 2018]. As depicted in Figure I.1, the telesurgery-related devices communicate with each other via cellular access network. At ordinary times the subscribers could only use and pay for the best-effort guarantees. Whenever there is a temporary demand for dedicated resources and guarantees (e.g., an urgent telesurgery), the subscriber could initiate a request for the UE-to-UE session mapping to the dedicated resources. When the UE-to-UE session is terminated, the dedicated resources are simultaneously released.

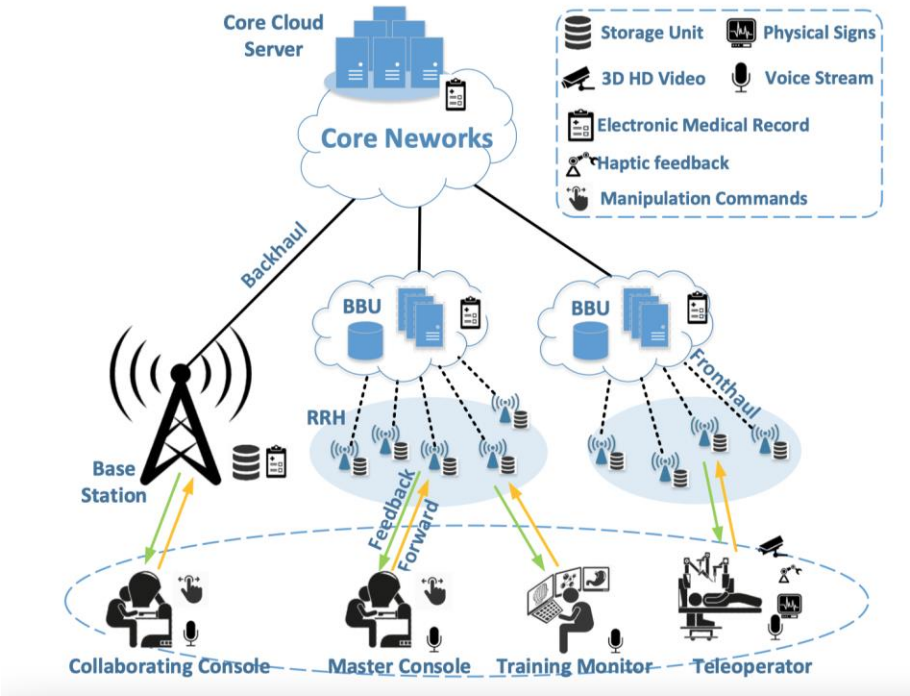

Figure I.1 The typical scenarios of telesurgery

I.2 Disaster rescue scenarios

The disaster rescue scenarios are cited from [b-ITU-T Y.2065, Service and capability requirements for e-health monitoring services]. In the disaster rescue scenarios, by means of advanced communication and diagnostic tools, the sampled physiological parameters of injured people can be obtained at anytime, anywhere and in a timely and accurate way by the medical staff located both inside and outside of the disaster area. Then the medical staff can determine the conditions of those injured according to sampled physiological parameters, and they can give first-aid guidance to them. The location information of those injured is acquired and recorded by means of the wireless sensor network, so that those who are injured can be easily found by the medical staff.

The disaster rescue scenarios include those inside the disaster area and those outside of the disaster area. For those inside the disaster area, the sampled physiological parameters are transmitted in a wireless way, while for those outside of the disaster area, the sampled physiological parameters can be transmitted in wired or wireless ways.

In disaster rescue scenarios, the e-health monitoring devices should have the basic medical monitoring capability, as well as the capabilities of short-distance and long-distance communication in order to acquire and transmit data to the wireless gateway and remote monitoring centre.

An example of a disaster rescue scenario is depicted in Figure I.2.

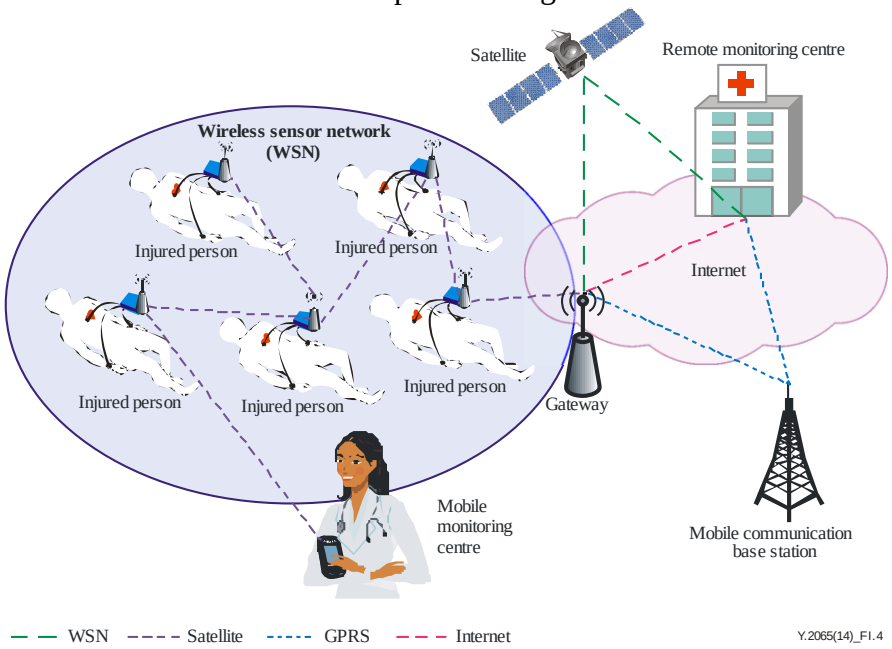

Figure I.2 Disaster rescue scenarios

I.3 Big data streams guarantee scenarios

A typical example of big data streams guarantee is the big file sharing between 2 manufacturing branches, which could be from the same enterprise or different enterprises. As depicted in Figure I.3, it requires complete the sharing of a big data in a short duration, the dedicated resources must be allocated and released in real-time based on a specific request.

Figure I.3 Big file sharing scenarios

NOTE - In the above 3 categories of scenarios, if the 2 UEs are form the same organization, they are in the same VN group, the control plane just needs to establish dedicated QoS flows based on the dedicated requests in the existing VN group. If the 2 UEs are form different organizations, the control plane needs to establish a new VN group based on the dedicated requests for this inter-organization demand before establish dedicated QoS flows in the new VN group.

Bibliography

[b-ITU-R M.2150-1] Recommendation ITU-R M.2150-1 (2022), *Detailed specifications of the terrestrial radio interfaces of International Mobile Telecommunications-2020 (IMT-2020).*

[b-ITU-T Y.2065] Recommendation ITU-T Y.2065 (2014), *Service and capability requirements for e-health monitoring services.*

[b-ITU-T Y.2233] Recommendation ITU-T Y.2233 (2010), *Requirements and framework allowing accounting and charging capabilities in NGN.*

[b-ITU-T Y.3100] Recommendation ITU-T Y.3100 (2018), *Terms and definitions for IMT-2020 network Corrigendum 1.*

[b-3GPP TS 22.261] 3GPP TS 22.261 V19.4.0 (2023), *Service requirements for the 5G system; Stage 1 (Release 19).*

[b-3GPP TS 23.501] 3GPP TS 23.501 V18.3.0 (2023), *System architecture for the 5G system; Stage 2 (Release 18).*

[b-3GPP TS 25.301] 3GPP TS 23.501 V17.0.0 (2022), *Radio Interface Protocol Architecture (Release 17).*

[b-3GPP TS 25.302] 3GPP TS 23.501 V17.0.0 (2022), *Services provided by the physical layer (Release 17).*

[b-Paper] M. Perez, S. Xu, S. Chauhan, A. Tanaka, K. Simpson, H. Abdul Muhsin, and R. Smith, "Impact of delay on telesurgical performance: study on the robotic simulator dv-trainer", *International Journal of Computer Assisted Radiology and Surgery,* vol. 11, pp. 581 587, 2015.

[b-Paper] M. Eid, J. Cha, and A. E. Saddik, "Admux: An adaptive multiplexer for haptic - audio -visual data communication", *IEEE Transactions on Instrumentation and Measurement,* vol. 60, no. 1, pp. 2131, Jan 2011.

[b-Paper] B. Cizmeci, X. Xu, R. Chaudhari, C. Bachhuber, N. Alt, and E. Steinbach, "A multiplexing scheme for multimodal teleoperation", *ACM Trans. Multimedia Comput. Commun. Appl.,* vol. 13, no. 2, pp. 128, Apr. 2017. [Online]. Available: http://doi.acm.org/10.1145/3063594

[b-Paper] M. Patel and J. Wang, "Applications, challenges, and prospective in emerging body area networking technologies", *IEEE Wireless Communications,* vol. 17, no. 1, pp. 8088, February 2010.

[b-Paper] T. Hachisu and H. Kajimoto, "Vibration feedback latency affects material perception during rod tapping interactions", *IEEE Transactions on Haptics,* vol. 10, no. 2, pp. 288295, April 2017.

[b-Paper] Qi Zhang, Jianhui Liu, and Guodong Zhao, "Towards 5G Enabled Tactile Robotic Telesurgery", *arXiv:1803.03586v1,* 9 Mar 2018

TBD

Attachment 1:
A.1 justification for proposed draft new Recommendation

Question:	Q20/13	**Proposed new ITU-T Recommendation**	Geneva, 23 October – 3 November 2023	
Reference and title:	Y.U2USM-req-fra "Future networks including IMT-2020 network: requirements and framework for the support of UE-to-UE session management "			
Base text:			**Timing:**	2025-Q4
Editor(s) :	Xiaobin Liang, China Telecom, +86-20-3863-9179, liangxb2@chinatelecom.cn Li Lu, China Telecom, +86-20-3863-9290, lilu@chinatelecom.cn Cancan Huang, China Telecom, +86-20-3863-9366, huangcanc@chinatelecom.cn Yongsheng Liu, China Unicom, +86-186-0110-6253, liuys170@chinaunicom.cn Nanxiang Shi, China Mobile, +86-136-9929-1776, shinanxiang@chinamobile.com		**Approval process:**	AAP

Scope (defines the intent or object of the Recommendation and the aspects covered, thereby indicating the limits of its applicability):

This draft Recommendation specifies the requirements and framework for the support of UE-to-UE session management in future networks including IMT-2020 network.

The scope of this draft Recommendation includes:

– Introduction of UE-to-UE session using layer 3 / 2 functions and capabilities.

– High-level requirements of supporting UE-to-UE session management in future networks including IMT-2020 network.

– Architectural framework of supporting UE-to-UE session management in future networks including IMT-2020 network.

– Security considerations.

Summary (provides a brief overview of the purpose and contents of the Recommendation, thus permitting readers to judge its usefulness for their work):

With the development of the digital economy, more and more comprehensive and customized new communication service demands have emerged, especially the on-demand real-time services brought by e-Health monitoring services and big data stream guarantees between 2 peers. These new demands require a pay-as-allocation business model. The current IMT-2020 framework does not fully support these new demands. It is proposed to extend the network capabilities of the current IMT-2020 framework to support UE-to-UE session management and meet the new service demands.

This draft Recommendation specifies the requirements and framework for the support of UE-to-UE session management in future networks including IMT-2020 network in order to meet the above-mentioned new service demands.

Relations to ITU-T Recommendations or to other standards (approved or under development):

ITU-T Y.3101, ITU-T Y.3104, ITU-T Y.2065, 3GPP TS 22.261, 3GPP TS 23.501

Liaisons with other study groups or with other standards bodies:

ITU-T SG16, ITU-T SG2, ITU-T SG17, 3GPP, ITU-R WP5D, ITU-R SG5

Supporting members that are committing to contributing actively to the work item:

China Telecom, China Unicom, China Mobile