NYU TANDON SCHOOL OF ENGINEERING

A Rural Macrocell (RMa) Path Loss Model for Frequencies Above 6 GHz in the 3GPP Channel Model Standard

George R. MacCartney, Jr., Shu Sun, Theodore S. Rappaport
{gmac, ss7152, tsr}@nyu.edu

16 August 2016

NYU WIRELESS

G. R. MacCartney, S. Sun, and T. S. Rappaport, "Millimeter Wave Wireless Communications: New Results for Rural Connectivity," *All Things Cellular'16: 5th Workshop on All Things Cellular Proceedings*, in conjunction with ACM MobiCom, Oct. 7, 2016.

© 2016 NYU WIRELESS

Agenda

A Rural Macrocell (RMa) Path Loss Model for Frequencies Above 6 GHz in the 3GPP Channel Model Standard

- Existing RMa path loss models adopted in 3GPP TR 38.900
- Problems with the existing RMa path loss models
- Proposal of a close-in reference distance (CI) RMa path loss model
- New 73 GHz measurement campaign for RMa path loss models

Existing RMa path loss models adopted in 3GPP TR 38.900

- **3GPP RMa LOS path loss model**

$$PL_1 = 20\log(40\pi \cdot d_{3D} \cdot f_c/3) + \min(0.03h^{1.72}, 10)\log_{10}(d_{3D}) - \min(0.044h^{1.72}, 14.77) + 0.002\log_{10}(h)d_{3D}$$

$$PL_2 = PL_1(d_{BP}) + 40\log_{10}(d_{3D}/d_{BP})$$

$$d_{BP} = 2\pi \cdot h_{BS} \cdot h_{UT} \cdot f_c/c$$

- **3GPP RMa NLOS path loss model**

$$PL = \max(PL_{RMa-LOS}, PL_{RMa-NLOS})$$

$$PL_{RMa-NLOS} = 161.04 - 7.1\log_{10}(W) + 7.5\log_{10}(h) - (24.37) - 3.7(h/h_{BS})^2)\log_{10}(h_{BS}) (43.42 - 3.1\log_{10}(h_{BS}))(\log_{10}(d_{3D}) - 3) + 20\log_{10}(f_c) - (3.2(\log_{10}(11.75h_{UT}))^2 - 4.97)$$

- Adopted from ITU-R M.2135 report
- Long & confusing equations
- Numerous parameters
- Do measurements confirm it at mmWave?

Existing RMa path loss models adopted in 3GPP TR 38.900

3GPP TR 38.900 Release 14 LOS and NLOS RMa path loss model default antenna height values and applicability ranges

RMa LOS Default Values Applicability Range
$10\ \text{m} < d_{2D} < d_{BP}$,
$d_{BP} < d_{2D} < 10\,000\ \text{m}$,
$h_{BS} = 35\ \text{m}$, $h_{UT} = 1.5\ \text{m}$, $W = 20\ \text{m}$, $h = 5\ \text{m}$
Applicability ranges: $5\ \text{m} < h < 50\ \text{m}$; $5\ \text{m} < W < 50\ \text{m}$;
$10\ \text{m} < h_{BS} < 150\ \text{m}$; $1\ \text{m} < h_{UT} < 10\ \text{m}$
RMa NLOS Default Values Applicability Range
$10\ \text{m} < d_{2D} < 5\,000\ \text{m}$,
$h_{BS} = 35\ \text{m}$, $h_{UT} = 1.5\ \text{m}$, $W = 20\ \text{m}$, $h = 5\ \text{m}$
Applicability ranges: $5\ \text{m} < h < 50\ \text{m}$; $5\ \text{m} < W < 50\ \text{m}$;
$10\ \text{m} < h_{BS} < 150\ \text{m}$; $1\ \text{m} < h_{UT} < 10\ \text{m}$

Problems with the existing RMa path loss models

$$d_{BP} = 2\pi \cdot h_{BS} \cdot h_{UT} \cdot f_c / c$$

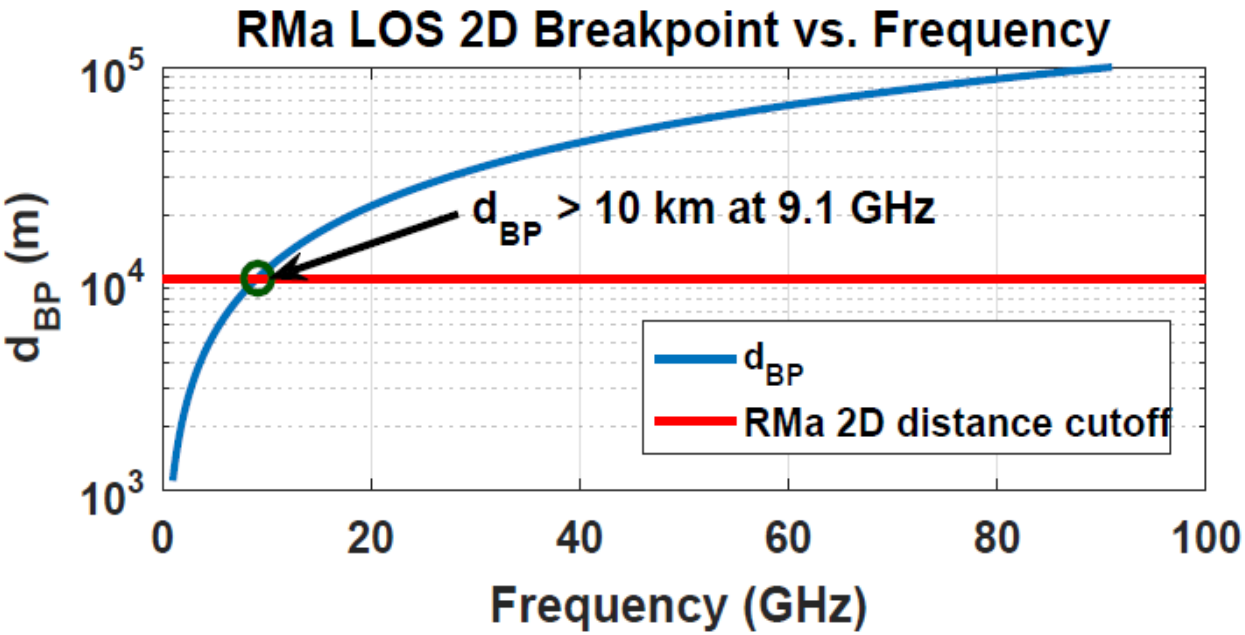

RMa LOS in TR 38.900 is mathematically invalid for frequencies above 9.1 GHz, as the breakpoint is larger than the cutoff distance for those frequencies when using default model parameters from slide 4

Problems with the existing RMa path loss models

- We could find only one report of measurements at 24 GHz to validate TR 38.900 RMa model, and this study mixed the LOS and NLOS scenarios
- 2D T-R separation ranged from 200 m to 500 m in the one measurement study we found, yet the RMa model in 3GPP TR 38.900 is specified for a 2D distance of from 10 m to 10 km in LOS, and from 10 m to 5 km in NLOS
- We could not find a best-fit indicator (e.g., RMSE) between any measured data and model
- We could not find any other studies that were peer-reviewed in the engineering literature
- We decided to carry out a rural macrocell measurement and modeling campaign

3GPP, “New measurements at 24 GHz in a rural macro environment,” Telstra, Ericsson, Tech. Rep. TDOC R1-164975, May 2016.

CI RMa Path Loss Model form

- **Close-in Free Space Reference Distance (CI) Path Loss Model**

$$\mathrm{PL}^{\mathrm{CI}}(f_c, d)[\mathrm{dB}] = \mathrm{FSPL}(f_c, d_0)[\mathrm{dB}] + 10n\log_{10}\left(\frac{d}{d_0}\right) + \chi_\sigma^{\mathrm{CI}}, \text{ where } d \geq d_0$$

$$\text{For } d_0 = 1 \text{ m: } \mathrm{FSPL}(f_c, d_0)[\mathrm{dB}] = 20\log_{10}\left(\frac{4\pi f_c d_0 \times 10^9}{c}\right) = 32.4 \text{ dB} + 20\log_{10}(f_c)$$

➢ Where f_c is the carrier frequency in GHz, d_0 is the close-in free space reference distance, n is the path loss exponent (PLE) and χ_σ denotes a zero-mean Gaussian random variable with standard deviation σ in dB.

- **3GPP CI Model Form with d_0 = 1 m:**

$$\mathrm{PL}^{\mathrm{CI}}(f_c[\mathrm{GHz}], d)[\mathrm{dB}] = 32.4 + 10n\log_{10}(d) + 20\log_{10}(f_c[\mathrm{GHz}]) + \chi_\sigma^{\mathrm{CI}}, \text{ where } d \geq 1 \text{ m}$$

$$\mathrm{FSPL}(1 \text{ GHz}, 1 \text{ m}) = 32.4 \text{ dB}$$

Finding an Equivalent but Simpler RMa Path Loss Model
An option for TR 38.900 Model RMa

- Monte Carlo simulations were performed June 2016 using 3GPP TR 38.900/ITU-R M.2135
- Simulations used LOS and NLOS RMa models at: 1, 2, 6, 15, 28, 38, and 73 GHz
- Each frequency simulated 1,000 times for distances ranging up to 1 km in both scenarios
- Resulting CI models are simpler models with virtually identical predictive results as ITU-R M.2135 and TR 38.900 but with fewer parameters and no break point problem.
- Presented these models to NTIA, ITU, FCC in June 2016– these eqns. improved accuracy when compared to the RMa TR 38.900/ITU-R M.2135 model (slide 3) for all frequencies from 500 MHz to 100 GHz (rain and oxygen effects are easily added):

$$\mathrm{PL}^{\text{CI-3GPP}}_{\text{RMa-LOS}}(f_c, d_{3D})[\mathrm{dB}] = 32.4 + 20.5\log_{10}(d_{3D}) + 20\log_{10}(f_c) + \chi_{\sigma_{\mathrm{LOS}}};\ \text{where } \sigma_{\mathrm{LOS}} = 4.1\ \mathrm{dB}, \text{ and } d_{3D} \geq 1\ \mathrm{m}$$

$$\mathrm{PL}^{\text{CI-3GPP}}_{\text{RMa-NLOS}}(f_c, d_{3D})[\mathrm{dB}] = 32.4 + 27.8\log_{10}(d_{3D}) + 20\log_{10}(f_c) + \chi_{\sigma_{\mathrm{NLOS}}};\ \text{where } \sigma_{\mathrm{NLOS}} = 8.2\ \mathrm{dB}, \text{ and } d_{3D} \geq 1\ \mathrm{m}$$

- f_c in GHz

See: http://wireless.engineering.nyu.edu/presentations/NTIA-propagation-presentation-JUNE-15-2016_v1%203.pdf see slides 25-30

New Measurement Campaign at 73 GHz for RMa Path Loss Models Above 6 GHz

- Measurements were conducted in a **rural** setting in Riner, Virginia with 190 dB range
- Motivation: To validate the CI RMA model well beyond 1 km in the field
- Transmitted 73.5 GHz CW tone, 15 kHz RX bandwidth, TX power 14.7 dBm (29 mW)
- 14 LOS locations, 17 NLOS locations, 5 outages
- Local time averaging used to obtain RX power at each location
- 2D T-R separation ranged from:
  - 33 m to 10.8 km for LOS scenarios
  - 3.4 km to 10.6 km for NLOS scenarios
- TX location: top of mountain ridge (altitude above sea level: 763 m, ~110m above terrain).
- RX locations: average altitude of 650 m above sea level on undulating terrain.
- TX and RX antennas: 27 dBi of gain and 7º azimuth and elevation half-power beamwidth.
- TX antenna: fixed downtilt of 2º
- RX antenna: 1.6 to 2 meter height above ground, on average
- For each measurement location, the best TX antenna azimuth angle and best RX antenna azimuth and elevation angle were manually determined

73 GHz Transmitter Equipment

- Max transmit power: 14.71 dBm (29 milliwatts)
- With horn antenna, equivalent to 14.8 W EIRP

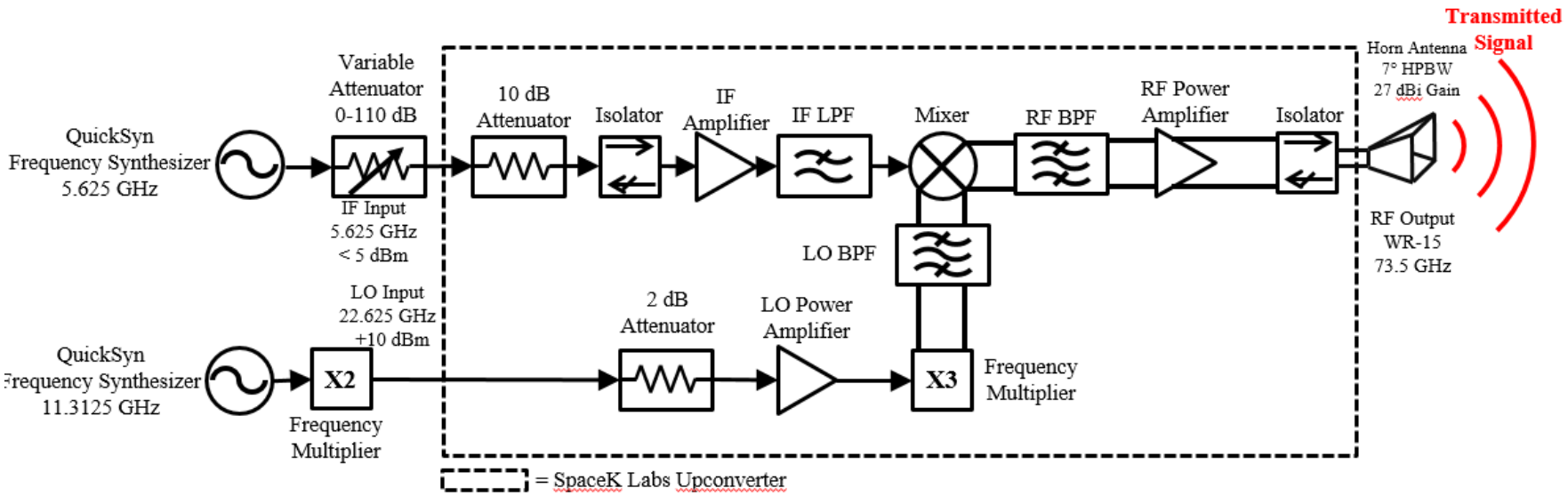

73 GHz Receiver Equipment

- Downconverter gain of 30 dB
- RX JCA LNA gain of 35 dB
- Max measurable path loss of 190 dB
- RX height of ~ 1.6 - 2 meters on average

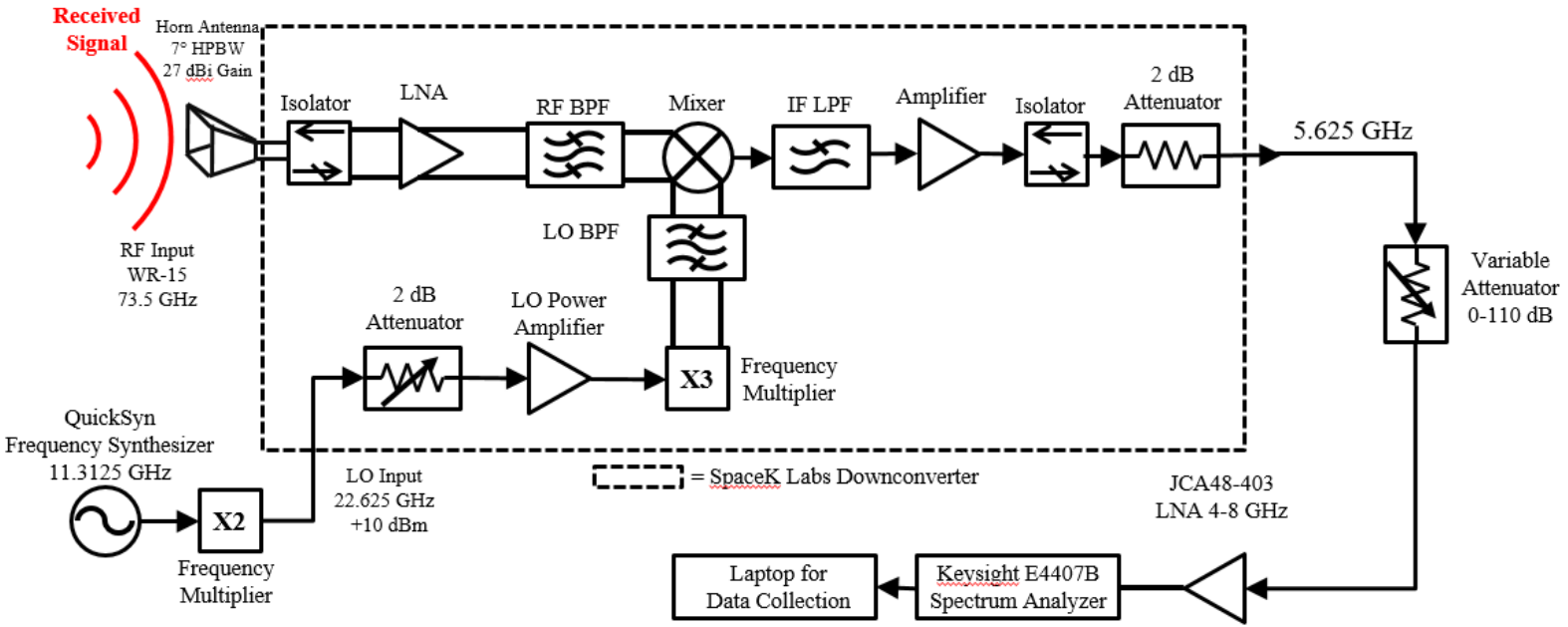

73 GHz TX Equipment in Field

TX View of Horizon

View to the North from Transmitter.

Note mountain on left edge, and the yard slopes up to right, creating a diffraction edge with TX antenna if TX points too far to the right.

TX beam headings and RX locations were confined to the center of the photo to avoid both the mountain and the right diffraction edge

Schematic of TX Location and Surroundings

TX antenna:

- ❖ placed on porch of the house
- ❖ No obstructions or diffraction
- ❖ 31 m from TX to mountain edge
- ❖ 2 deg. downtilt avoids diffraction from the mountain edge
- ❖ TX about 110 m above terrain
- ❖ Provided ~11 km measurement range

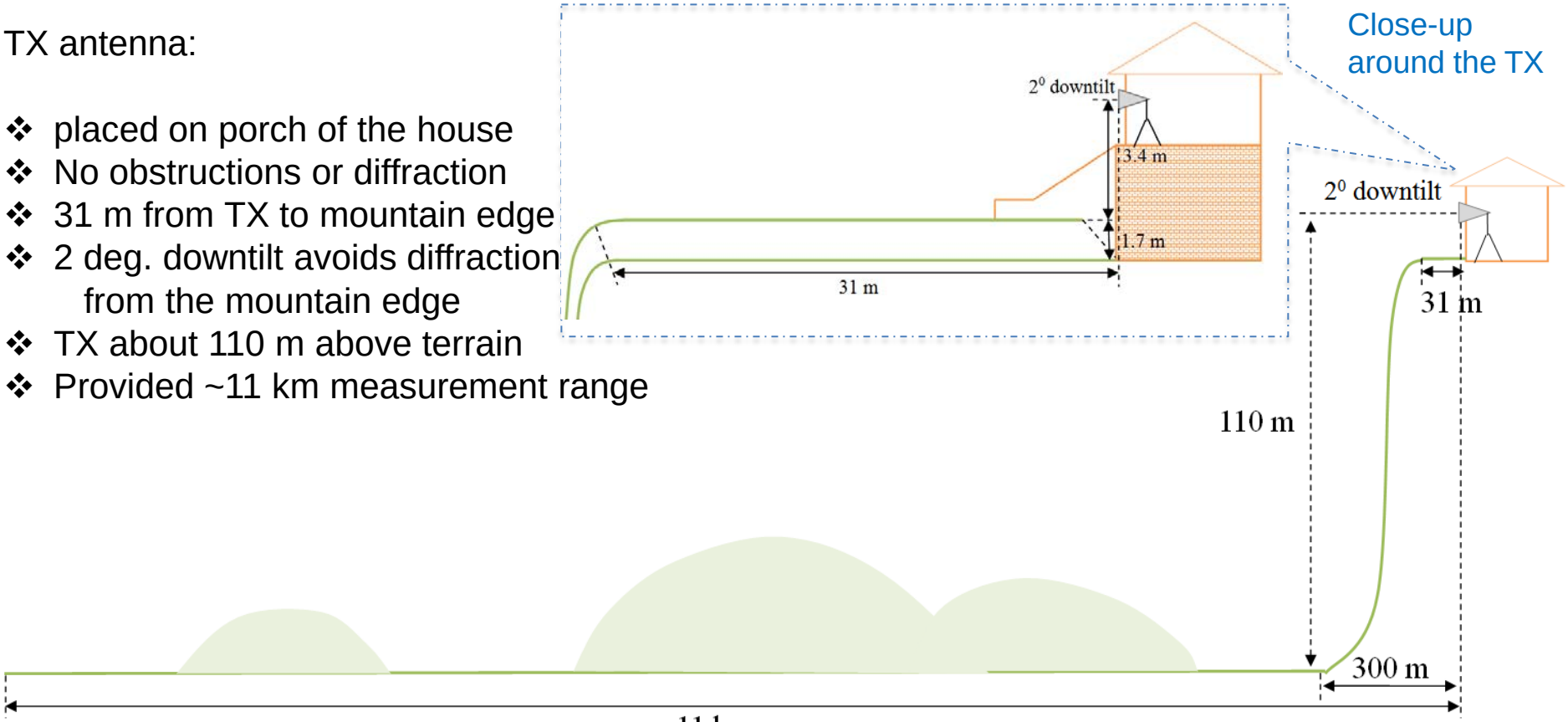

(not drawn to scale)

Map of Locations

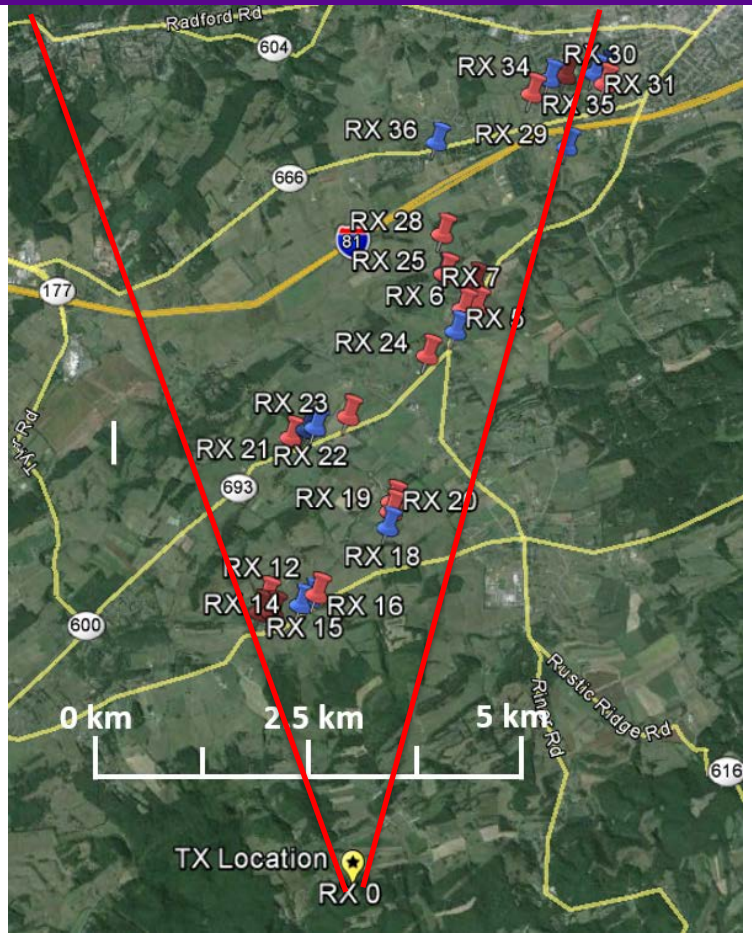

TX Location

LOS Scenario

NLOS Scenario

TX Azimuth Angle of View (+/- 10º of North) to avoid diffraction from mountain on left and yard slope on right

73 GHz RX Equipment in Field

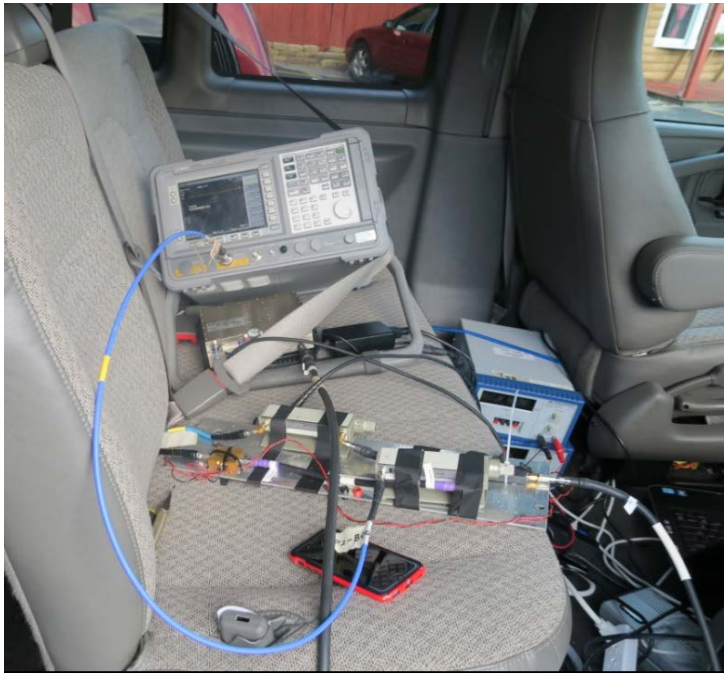

RX 5 LOS Location: 6.93 km

LOS with one tree blocking

RX 15 LOS Location: 3.44 km

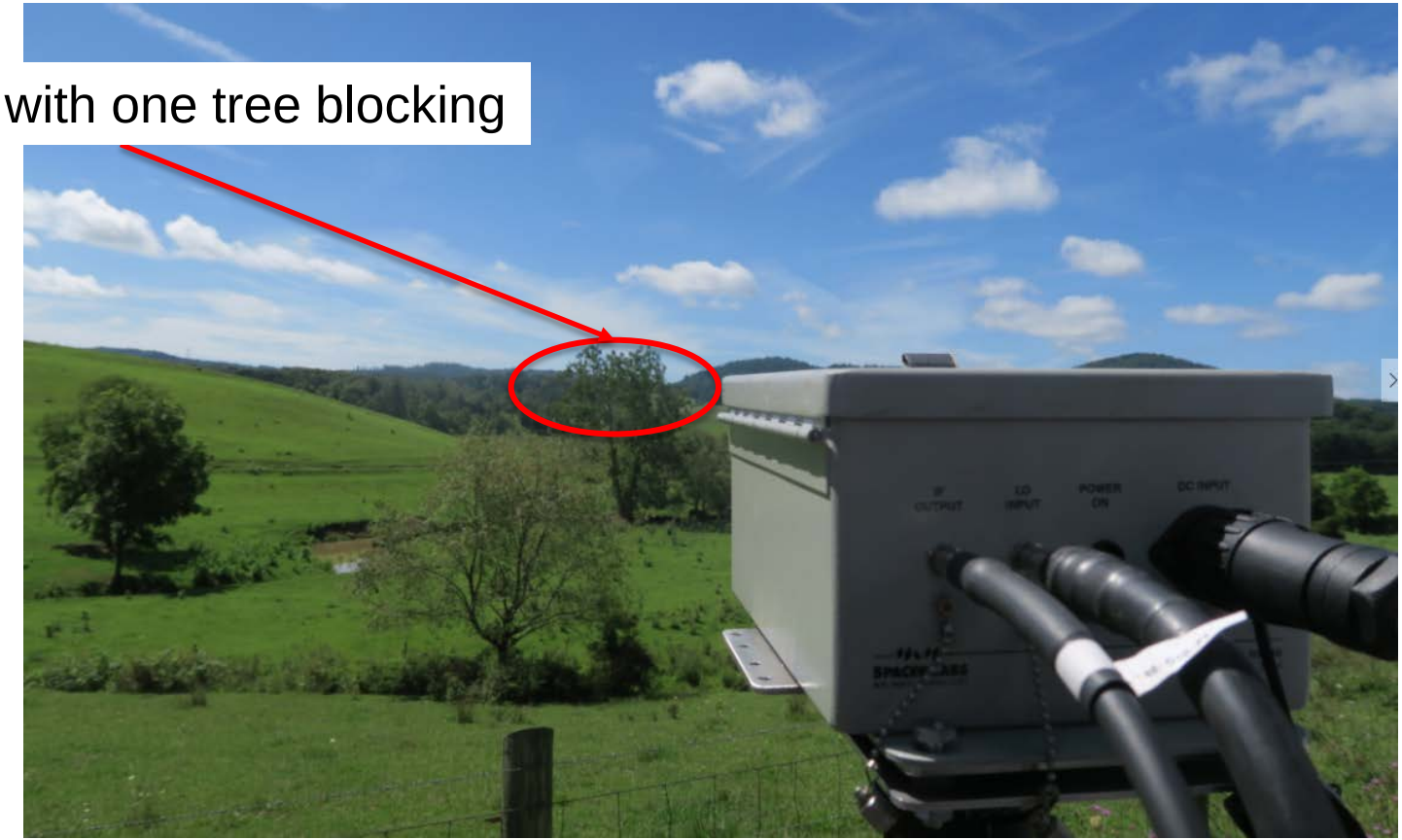

RX 23 NLOS Location: 5.72 km

Hills and foliage
create NLOS scenario

RX 24 NLOS Location: 6.57 km

Hills and foliage
create NLOS scenario

RX 26 LOS Location: 7.67 km

TX location at house – LOS location

RX 31 LOS Location: 10.74 km

- Diffraction loss due to TX azimuth departure angle and right diffraction edge due to yard at home (see slides 13 - 15)

TX location at house

73 GHz RMa Path Loss Data and Models

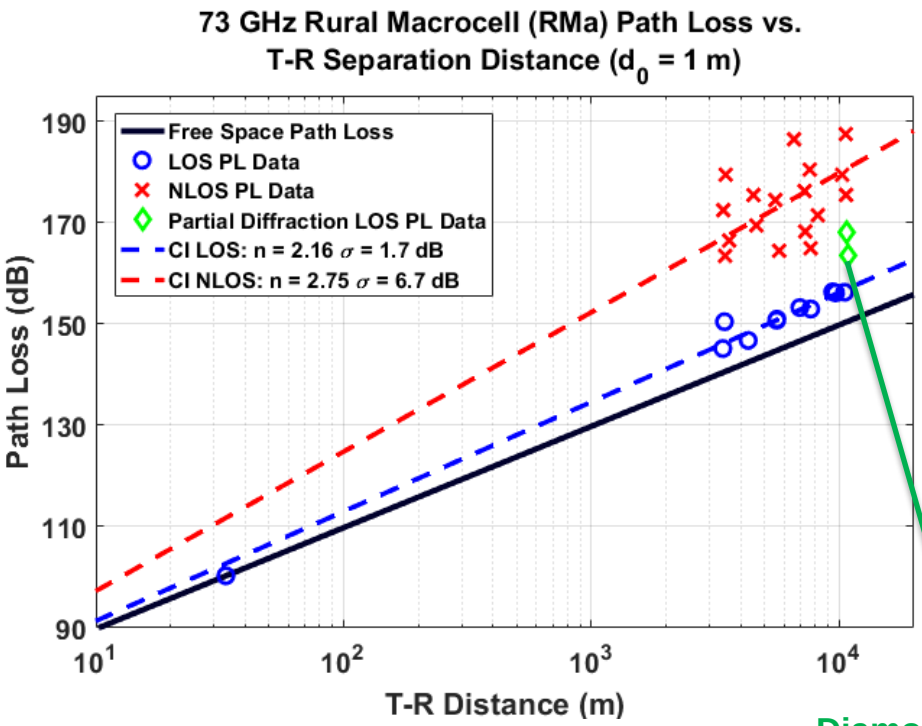

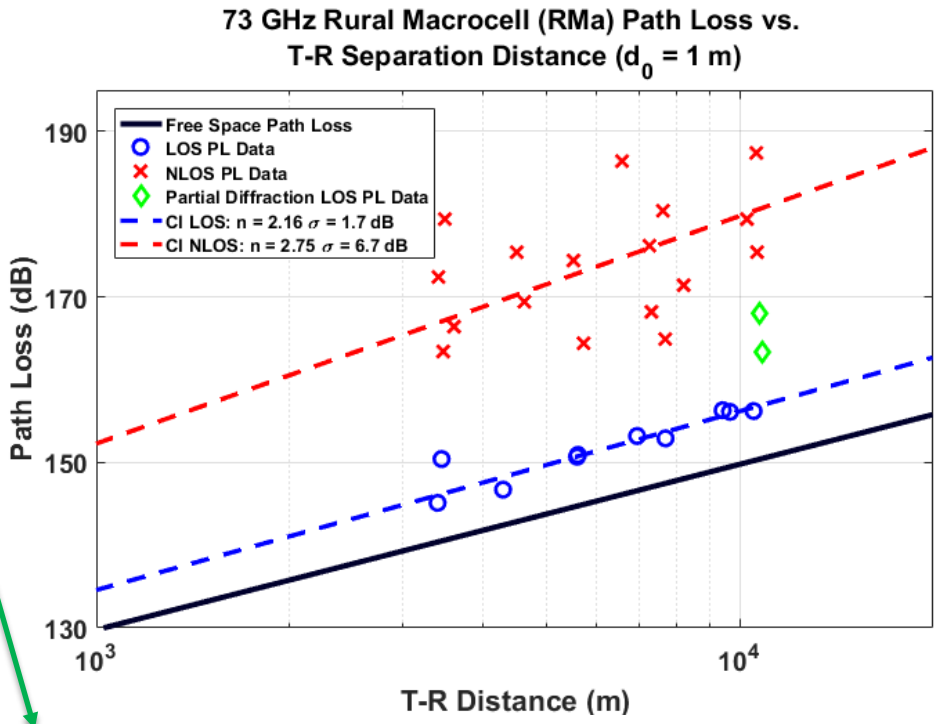

Diamonds are LOS locations with partial diffraction from TX azimuth departure angle from close-in mountain edge on the right, causing diffraction loss on top of free space

Proposed RMa Path Loss models for frequencies above 6 GHz

- First NYU RMa CI model on June 15, 2016, presented to NTIA, ITU, FCC based on simulations of existing TR 38.900 RMa model to 1 km distance:

$$\mathrm{PL}^{\text{CI-3GPP}}_{\text{RMa-LOS}}(f_c, d_{3D})[\mathrm{dB}] = 32.4 + 20.5\log_{10}(d_{3D}) + 20\log_{10}(f_c) + \chi_{\sigma_{\text{LOS}}};\ \text{where } \sigma_{\text{LOS}} = 4.1\ \text{dB, and } d_{3D} \geq 1\ \text{m}$$

$$\mathrm{PL}^{\text{CI-3GPP}}_{\text{RMa-NLOS}}(f_c, d_{3D})[\mathrm{dB}] = 32.4 + 27.8\log_{10}(d_{3D}) + 20\log_{10}(f_c) + \chi_{\sigma_{\text{NLOS}}};\ \text{where } \sigma_{\text{NLOS}} = 8.2\ \text{dB, and } d_{3D} \geq 1\ \text{m}$$

- Based on New RMa Measurements at 73 GHz to 11 km distance, we found best-fit RMa model:

$$\mathrm{PL}^{\text{CI}}_{\text{RMa-LOS}}(f_c, d_{3D})[\mathrm{dB}] = 32.4 + 21.6\log_{10}(d_{3D}) + 20\log_{10}(f_c) + \chi_{\sigma_{\text{LOS}}};\ \text{where } \sigma_{\text{LOS}} = 1.7\ \text{dB, and } d_{3D} \geq 1\ \text{m}$$

$$\mathrm{PL}^{\text{CI}}_{\text{RMa-NLOS}}(f_c, d_{3D})[\mathrm{dB}] = 32.4 + 27.5\log_{10}(d_{3D}) + 20\log_{10}(f_c) + \chi_{\sigma_{\text{NLOS}}};\ \text{where } \sigma_{\text{NLOS}} = 6.7\ \text{dB, and } d_{3D} \geq 1\ \text{m}$$

http://wireless.engineering.nyu.edu/presentations/NTIA-propagation-presentation-JUNE-15-2016_v1%203.pdf see slides 25-30

Comparison of NYU's earlier 3GPP CI model w/ RMa Path Loss Model based on measurements

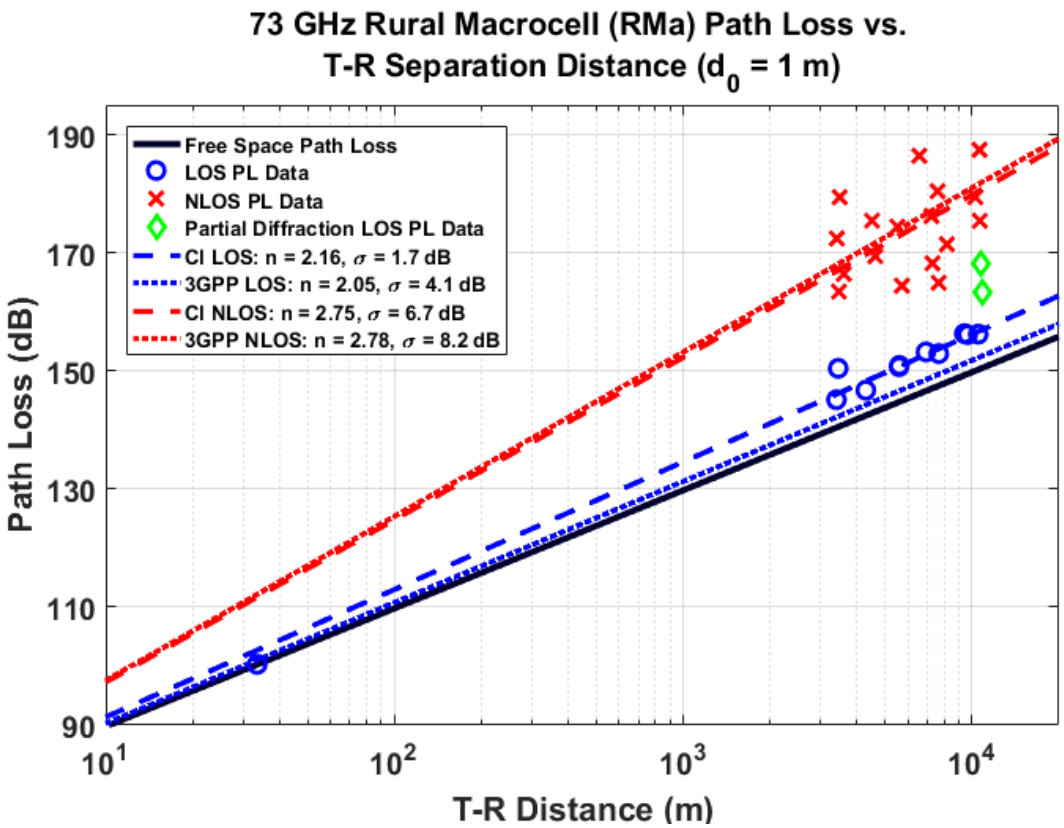

Simulations and measurements prove CI path loss exponent is frequency independent!

- **UMa path loss exponent is not a function of frequency when using a 1 m FSPL reference [1] [2]. RMa PLE is also not a function of frequency beyond 1 m.**

[1] K. Haneda et al., "5G 3GPP-like Channel Models for Outdoor Urban Microcellular and Macrocellular Environments," in *2016 IEEE 83rd Vehicular Technology Conference (VTC 2016-Spring)*, May, 2016.

[2] S. Sun, et. al., "Investigation of Prediction Accuracy, Sensitivity, and Parameter Stability of Large-Scale Propagation Path Loss Models for 5G Wireless Communications," IEEE Trans. Veh. Tech.,Vol. 65. No.5, May 2016, pp. 2843-2860.
http://ieeexplore.ieee.org/stamp/stamp.jsp?tp=&arnumber=7434656

Conclusions

- mmWave communication links will be useful to rural distances > 10 km (RMa).
- Existing 3GPP RMa path loss models are not defined above 9.1 GHz due to the breakpoint, and are not verified. CI path loss model is simple, accurate, verified.
- **Proposal**: Replace TR 38.900 RMa models or make the following RMa path loss models *optional*. They are based on measurements, applicable from 1 m to 12 km and frequencies of 500 MHz to 100 GHz, may wish to increase STD DEV to 4 or 8 dB (LOS/NLOS) to match current TR 38.900 RMa STD DEV.

$$\mathrm{PL}^{\mathrm{CI}}_{\text{RMa-LOS}}(f_c, d_{3D})[\mathrm{dB}] = 32.4 + 21.6\log_{10}(d_{3D}) + 20\log_{10}(f_c) + \chi_{\sigma_{\mathrm{LOS}}};\ \text{where } \sigma_{\mathrm{LOS}} = 1.7\ \mathrm{dB}, \text{ and } d_{3D} \geq 1\ \mathrm{m}$$

or 4.0 dB

$$\mathrm{PL}^{\mathrm{CI}}_{\text{RMa-NLOS}}(f_c, d_{3D})[\mathrm{dB}] = 32.4 + 27.5\log_{10}(d_{3D}) + 20\log_{10}(f_c) + \chi_{\sigma_{\mathrm{NLOS}}};\ \text{where } \sigma_{\mathrm{NLOS}} = 6.7\ \mathrm{dB}, \text{ and } d_{3D} \geq 1\ \mathrm{m}$$

or 8.0 dB

G. R. MacCartney, S. Sun, and T. S. Rappaport, "Millimeter Wave Wireless Communications: New Results for Rural Connectivity," *All Things Cellular'16, 5th Workshop on All Things Cellular Proceedings, in conjunction with ACM MobiCom* , Oct. 7, 2016.

Thank You!