On Integration of Unlicensed Spectrum

3GPP workshop on LTE in unlicensed spectrum

BlackBerry UK Limited

RWS-140027

Historical Perspective

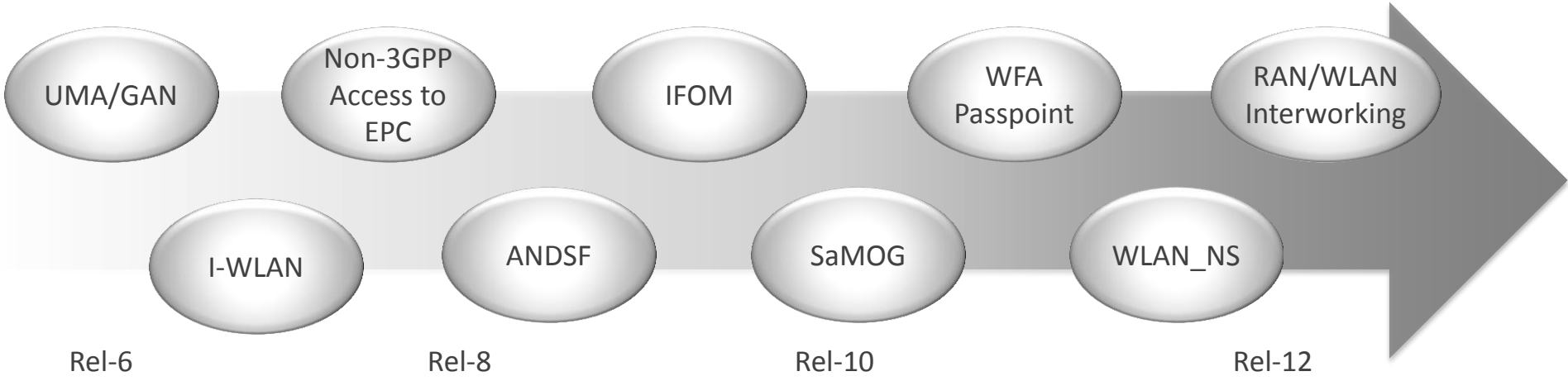

Closer Integration?

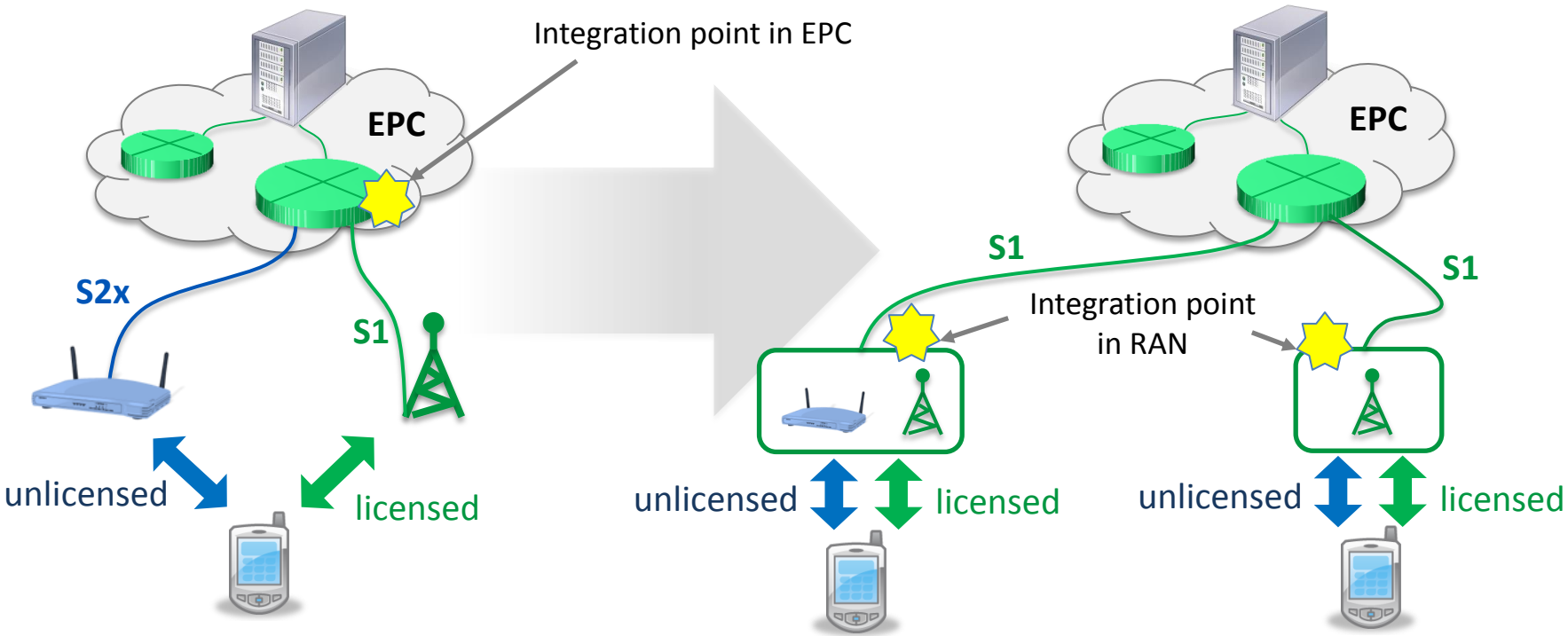

Rel-12 Architecture

a) RAN-integrated WiFi + LTE

b) LTE + LTE-U

Stated Motivations

	Point of Integration		
	EPC	RAN	
	WiFi/LTE	WiFi/LTE	LTE/LTE-U
• Fast / opportunistic use of unlicensed spectrum • Improved control over traffic steering and QoS	½	✓	✓

• Intra-bearer aggregation
  • Continuity of service, mobility control
  • Increased peak throughput / capacity ('fat-pipe' scheduling)
	X	✓	✓

• Operation / maintenance of "one network"
  • Unified authentication and security management
  • Common Operations Support Systems (OSS)
	X	✓	✓

• Spectral efficiency (LTE vs. WiFi)	?	?	?

Feature Comparisons

		LTE Rel-12	Wi Fi 11ac / VHT
PHY	Bandwidth	100 MHz (5CC)	160 MHz
	Modulation	256/64 QAM (DL/UL)	256 QAM (DL or UL)
	MIMO	DL (x8), UL (x4)	DL (x8), UL (x8)
	Peak Rates	~ 4 / 1.5 Gbps (DL/UL)	~ 6.7 Gbps (DL or UL)
	User Multiple Access	FDM+TDM	Dynamic TDM (no FDM)
	HARQ	Yes	No
MAC	Control mechanism	Centralised/scheduled	Distributed coordination
	Adapted for unlicensed operation	No	Yes
	Peer-to-peer	Under development	Wi-Fi Direct

Device Aspects

- Wi-Fi:
  - Present in 100% of smartphones / tablets
  - Heavily embedded (home, workplace, commerce)
  - Functionality will remain on devices
  - Preservation of user experience is important
- Access to unlicensed – operator/user control:
  - Both architectures bring potential for contention over the medium and over HW resources
  - Coordination is necessary (numerous use cases)
- Unlicensed RF:
  - Potential impacts if new RAT employed
- Uplink
  - Additional complexity (e.g. UE LBT for LTE-U)

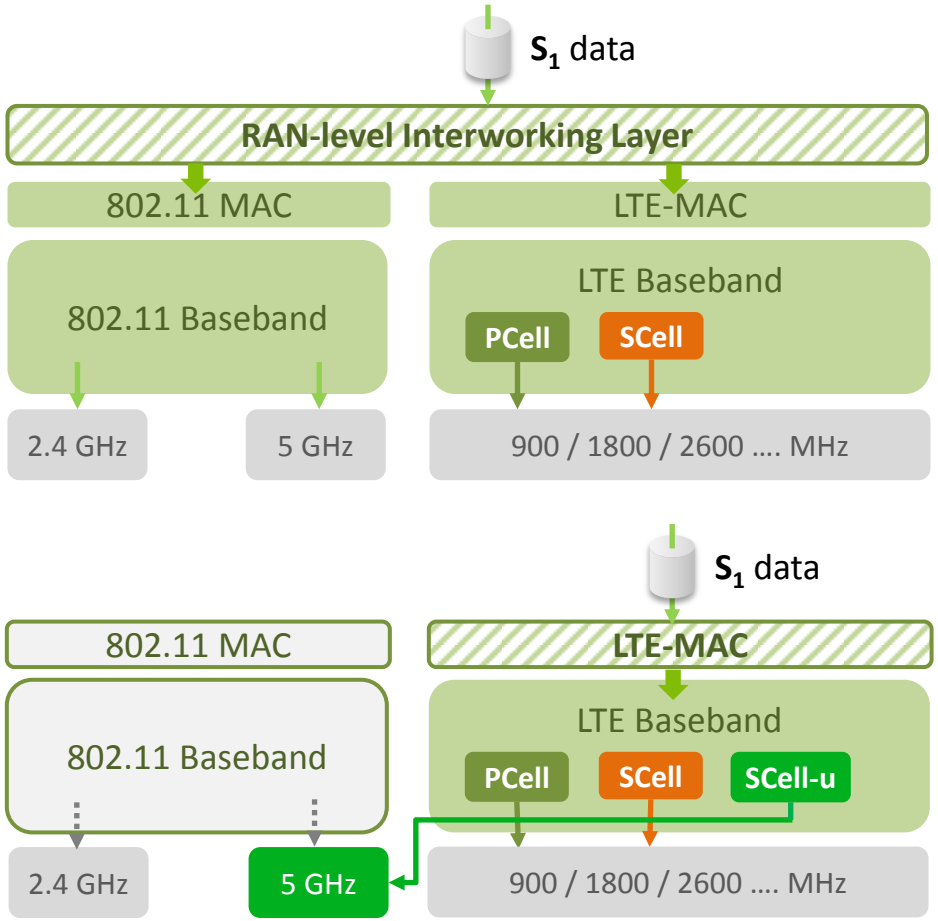

Regulatory Variation

- Harmonisation ongoing (5GHz)
- Regional variation remains:
  - Details of permitted use (indoor/outdoor, Tx pwr, antenna directionality, protection of primary users…)
  - Requirements for fair sharing and framework for compliance
- Solutions specific to region?
  - Require additional standardisation effort
  - Reduce global addressability of the market
  - Carry risk of unfair sharing and adverse impact to incumbents

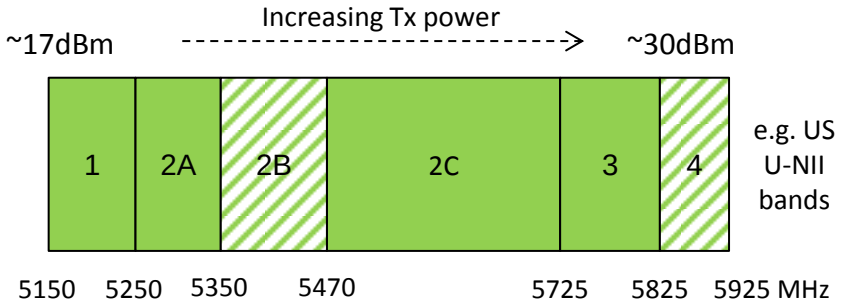

Structure of Work

- Establishing clear up-front requirements is essential
  - Scenarios, use cases, high-level aims & objectives
  - Targeted benefits beyond Rel-12
  - Solution agnostic phase
  - RAN plenary task

- Dependent on outcomes:
  - WG-level Study Items could follow (during Rel-13)
  - Subsequent Work Item phases...

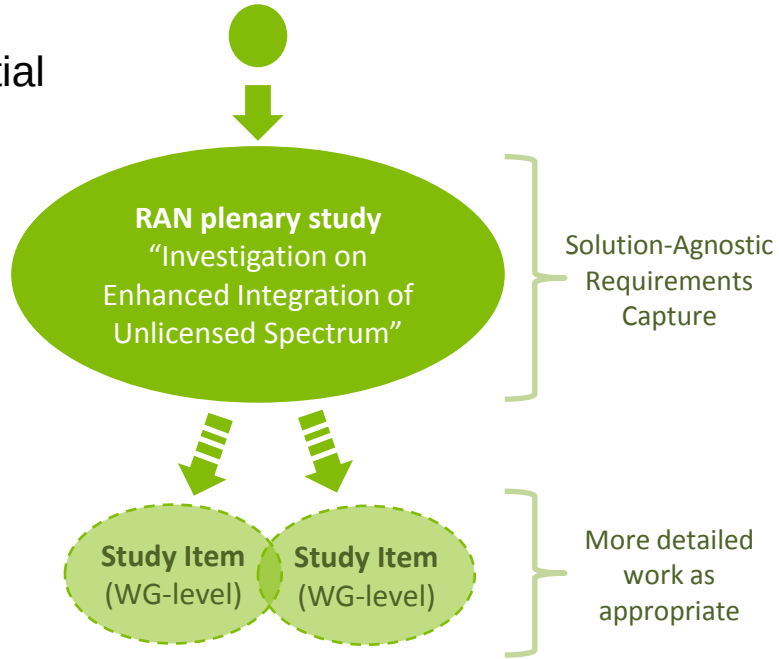

In Conclusion

- For RAN-level integration of licensed/unlicensed beyond R12…
  - Requirements are a necessary first step - RAN plenary role
  - Alternatives include interworking enhancements and LTE-U
  - Both warrant comparison against the requirements
- If LTE-U is to be progressed:
  - 3GPP should target fair sharing with Wi-Fi from the outset (irrespective of regional regulatory variation)
  - Targeted solutions should be global (economies of scale, manageable standardisation effort)
  - Care is needed to preserve existing Wi-Fi use cases and user experience
- UE complexity and standardisation effort are key factors

Thank You…