magnolia BROADBAND

UE AAS (Active Antenna System)

RWS-120015

3GPP Release 12 work shop
June 11th -12th , 2012, Ljubljana, SL

Agenda

- Needs addressed
- Current 3GPP UE multi- ANT configurations
- The proposal: Superpositioning BF
- Generic architecture
- Expected performance enhancement
- Implementation considerations
- Expected benefits
- Summary

magnolia BROADBAND

Needs addressed – Evolving Mobile Video

Cisco: 2011's mobile data traffic was x 8 the size of the entire global 2000's Internet , and Mobile video was 52 percent of traffic…

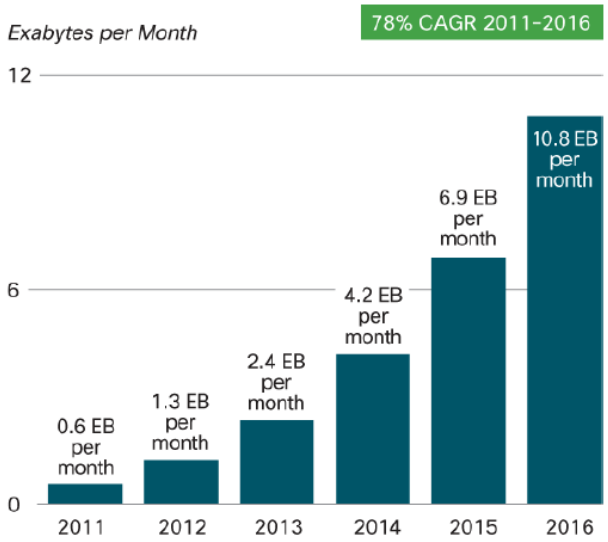

Source: Cisco VNI Mobile, 2012

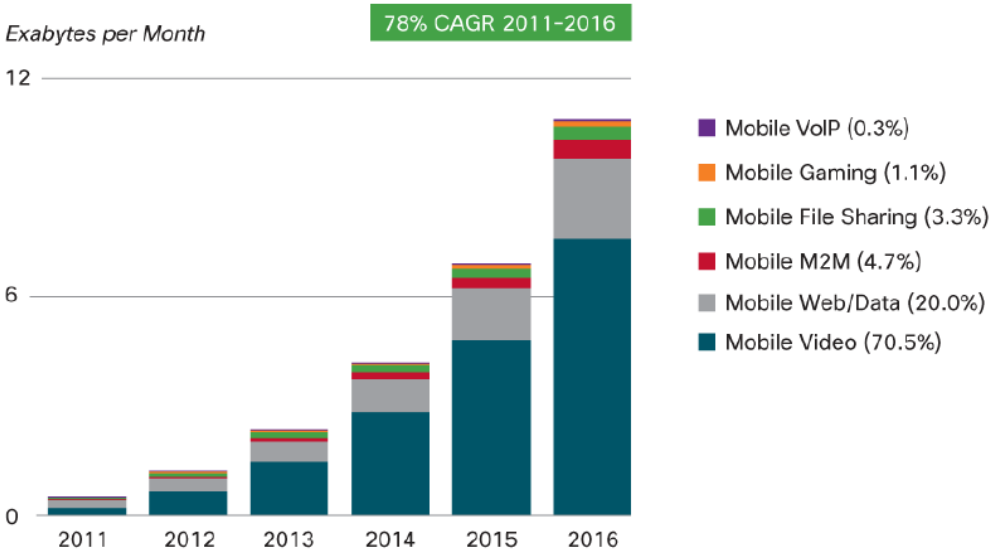

Figures in legend refer to traffic share in 2016.
Source: Cisco VNI Mobile, 2012

Needs addressed – Tablets' major role

Table 2. Summary of Per Device Usage Growth, MB per Month

Device Type	2010	2011	2016
Nonsmartphone	1.9	4.3	108
E-reader	0.5	0.73	2.8
Smartphone	55	150	2,576
Portable gaming console	244	317	1,056
Tablet	405	517	4,223
Laptop and netbook	1,460	2,131	6,942
M2M module	35	71	266

Source: Cisco VNI Mobile, 2012

Second Screen: A term that refers to an additional electronic device (e.g. tablet, smartphone) that allows a television audience to interact with the content they are consuming… when you let go of traditional TV, social television creates a need for interaction between the sender and content consumers… many companies both in content production, advertising and have adapted their formats to the user trying to get maximum attention and therefore more profitable. *Wikipedia*

magnolia BROADBAND

Current 3GPP UE multi- ANT configurations

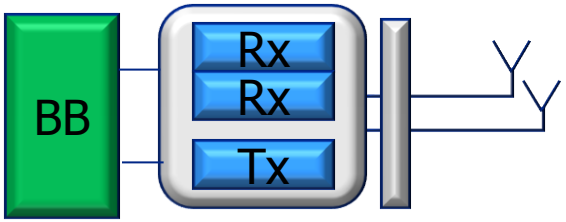

Rx DIV /2 x 2 DL MIMO

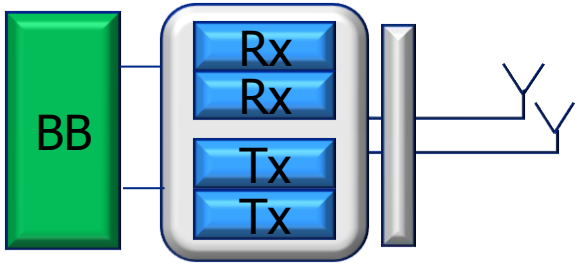

2x2 DL MIMO +ULTD /2 x 2 DL/UL MIMO

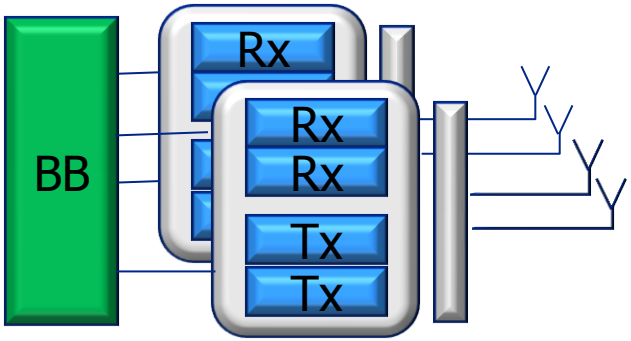

4 x 4 DL/UL MIMO

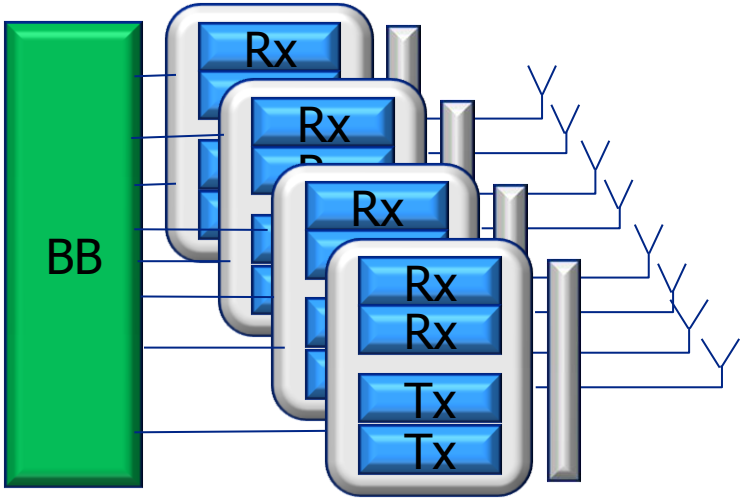

8 x 8 DL/UL MIMO

Superpositioning BF over current schemes

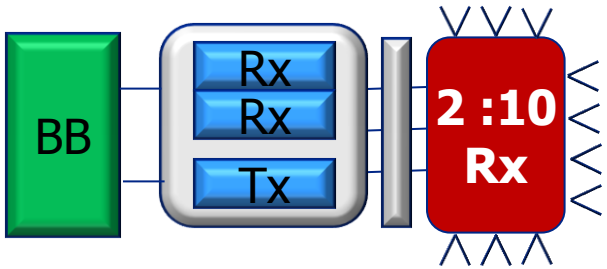

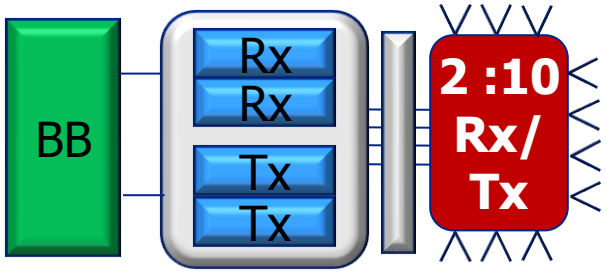

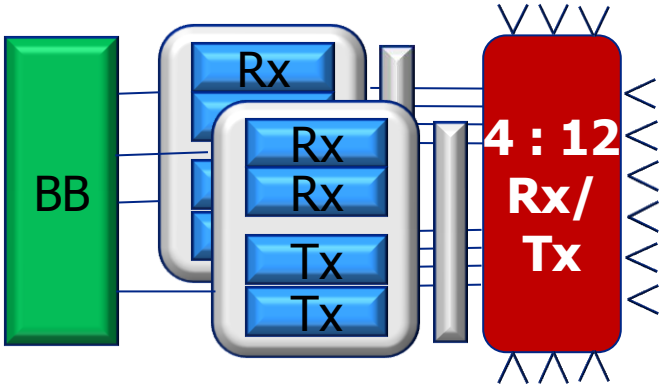

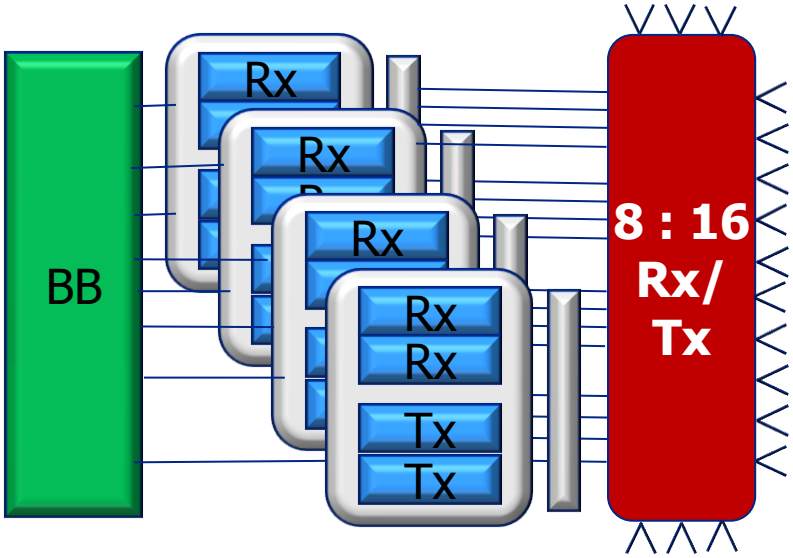

Generic architecture: 2x10 example

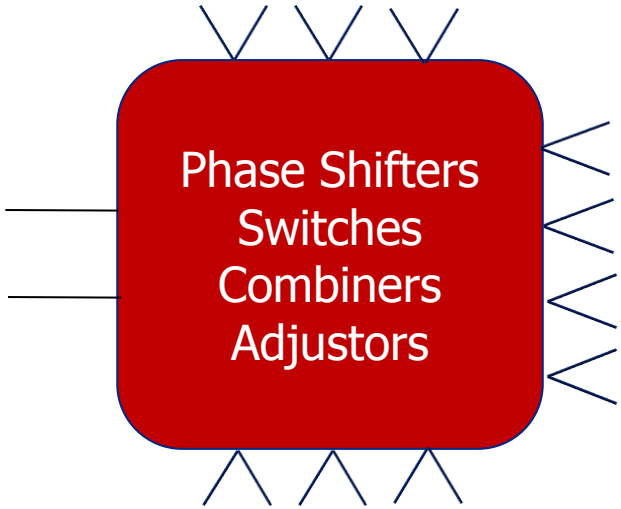

Rx

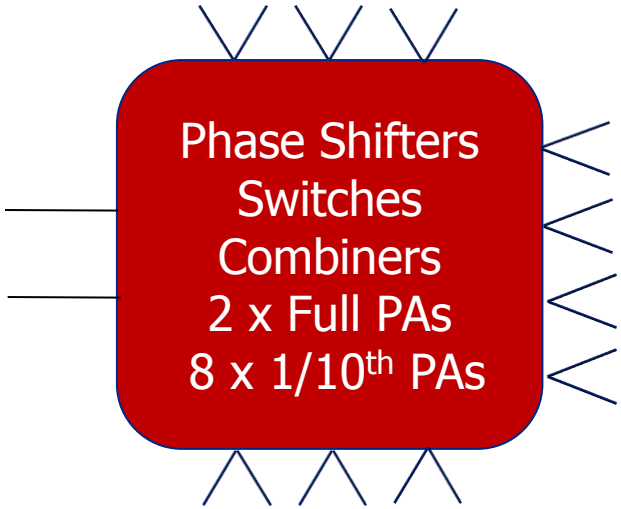

Tx

Expected performance enhancements

Scheme	ANT Ratio	Generic gain [dB]	Insertion loss [dB]	BTS Tx DeCorr loss [dB]	Implementation loss [dB]	Estimated Rx extra Gain [dB]
2 Rx DIV	2:10	7.0	1.2	0.0	0.5	5.3
2x2 DL MIMO	2:10	7.0	1.2	0.3	0.5	5.0
4x4 DL MIMO	4:12	4.8	0.5	0.5	0.3	3.5
8x8 DL MIMO	8:16	3.0	0.3	0.5	0.2	2.0

Scheme	ANT Ratio	Generic gain [dB]	Insertion loss [dB]	BTS Rx DeCorr loss [dB]	Implementation loss [dB]	Estimated Tx extra Gain [dB]
ULTD	2:10	7.0	1.2	0	0.5	5.3
2x2 UL MIMO	2:10	7.0	1.2	0.2	0.5	5.1
4x4 UL MIMO	4:12	4.8	0.5	0.3	0.3	3.7
8x8 UL MIMO	8:16	3.0	0.3	0.3	0.2	2.2

magnolia BROADBAND

Antennas implementation example

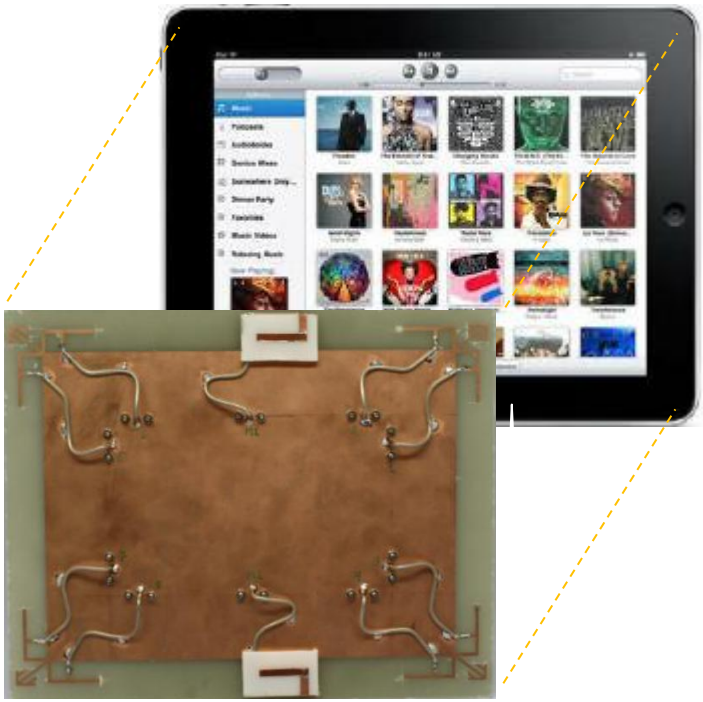

Panel containing 2 multi-band Main antennas + 8 dual band (1&2) auxiliary antennas
Courtesy ASTRI HK

magnolia BROADBAND

Antennas' 2D patterns Courtesy ASTRI HK

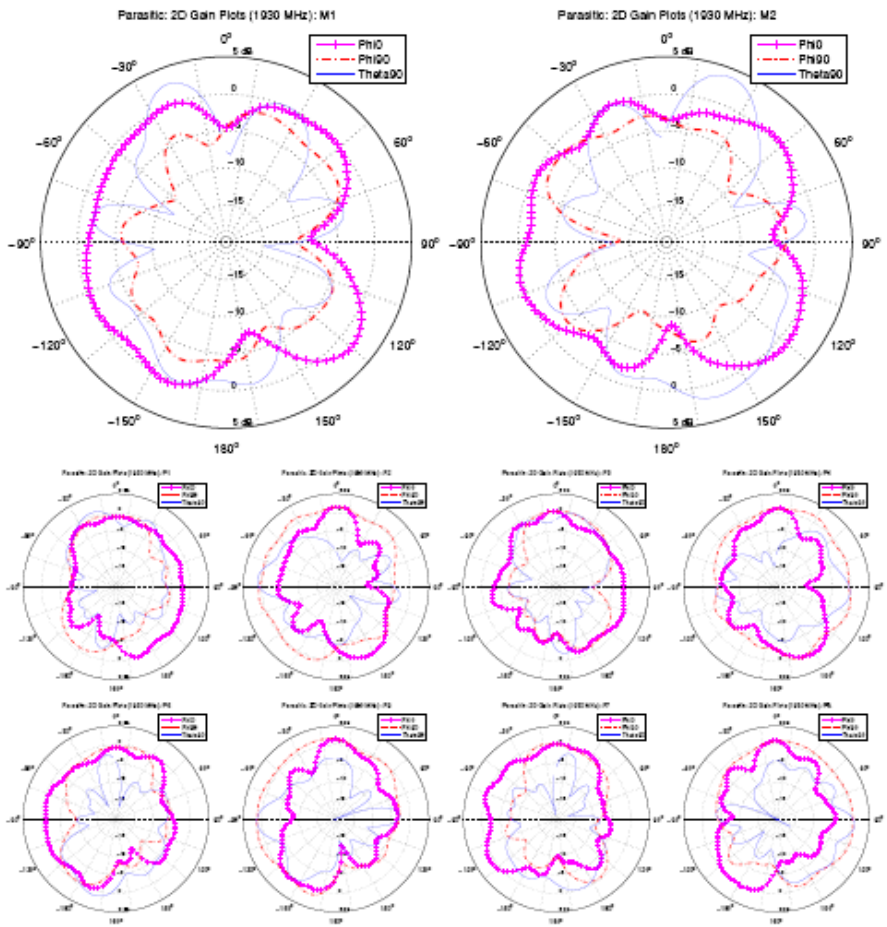

Figure 9. Three Cut Antenna Gain Patterns at 1930 MHz: Antennas with Parasitics

Notes:

- VSWR of all antennas < 2.0
- Envelope correlations < 0.1
- Efficiencies > 55% @ bands 1,2
- Isolations > -20 dB for 8 cases
  > - 8 dB for 2 cases

magnolia BROADBAND

Beam-Former implementation

- **MEMS**: Newly introduced low insertion loss, commercial level switches, facilitates low insertion loss phase shifters construction
- **RF CMOS & GAAS**: More mature and reliable, presents higher loss, but potentially lower cost
- **RF Integration:** Is required in order to come up with affordable BOM

magnolia BROADBAND

UE BB implementation

- Rx channel estimation based algorithms
- CL code book for Tx
- Signaling for phase shifters control

magnolia BROADBAND

Expected benefits

- Air-Protocol agnostic solution
- Effective for > 1GHZ bands
- Improved Rx gain & beam-forming will enhance User experience & increase network capacity
- Improved Tx gain and beam-forming will enhance cell-edge experience, reduce uplink interference, and boost battery life
- Superpositioned over existing 3GPP configurations
- Enables expanding coordinated scheduling/BF from eNBs to UEs

magnolia BROADBAND

Summary

- It is proposed to engage in development of Superpositioned Beam-Formers, in cases were the number of UE antennas N > M the number of transceivers
- Such cases will find implementation in tablets / Laptops, which are becoming a major data hogs, but at the same time offer larger real estate that can accommodate multiple antennas and facilitate a superior pipe
- Such beam-formers circuitry can rely on advanced low-insertion loss RF devices and circuitry, and integrated to provide affordable cost
- First stage could focus on DL enhancement, to be followed by UL

magnolia BROADBAND