A proposal for Rel-13 GROUPE message delivery to users of a group (Key Issue# 5.1)

Cisco
V1.4

July 2nd 2014

© 2010 Cisco and/or its affiliates. All rights reserved.

Rel-12 MTCe-GROUP
Existing Solution in previous TR (23.887)

- 3 Solutions
  - CBS
  - MBMS
  - IP Multicast

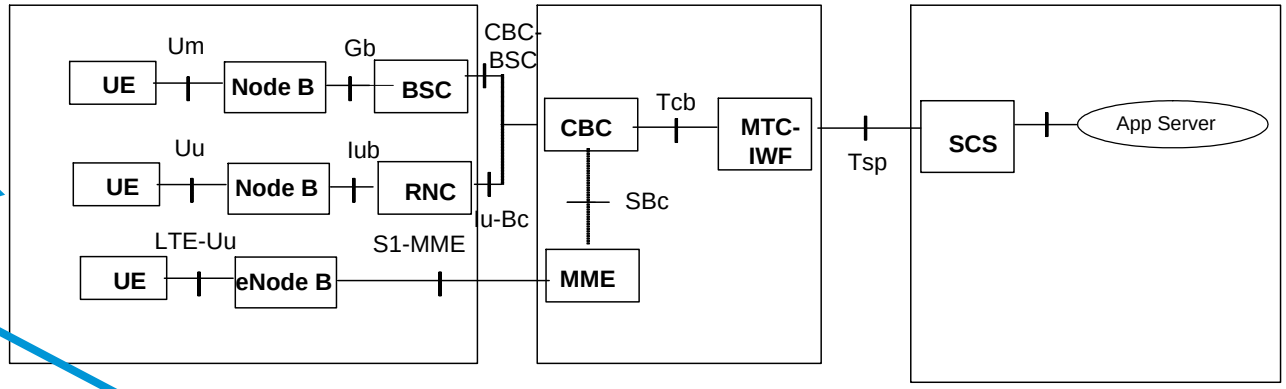

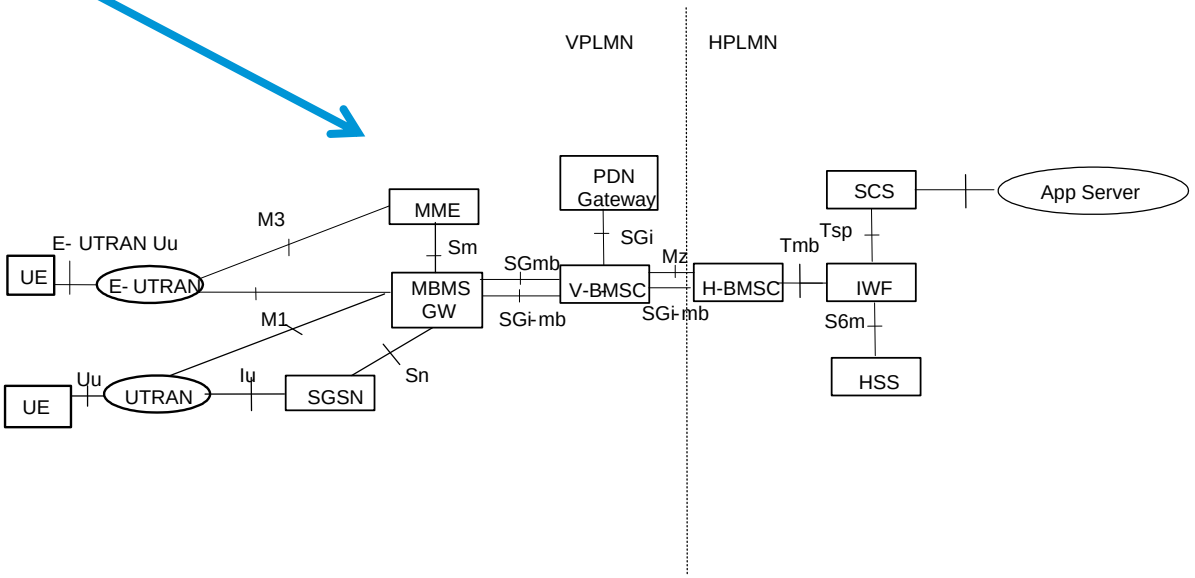

© 2010 Cisco and/or its affiliates. All rights reserved.

Why should a solution using PDN connection be looked into?

- Whats the least common denominator amongst existing solns from TR 23.887?
  - CBS/PWS solution for this issue requires at least one PDN connection to be maintained at the UE, and in the network.
  - eMBMS (or derivates thereof eg GCSE) solution for this issue requires at least one PDN connection to be maintained at the UE, and in the network.
  - IP-multicast solution for this issue requires at least one PDN connection to be maintained at the UE, and in the network.
  - ➔ All existing solutions documented in TR23.887 require, at minimum, atleast for E-UTRAN, for the UE to have at least one PDN connection to be maintained at UE and in the network
- The three existing solutions in TR 23.887 would need enhancements to work w/ Rel-12 PSM mode anyways

© 2010 Cisco and/or its affiliates. All rights reserved.

Cisco's Proposed Solution

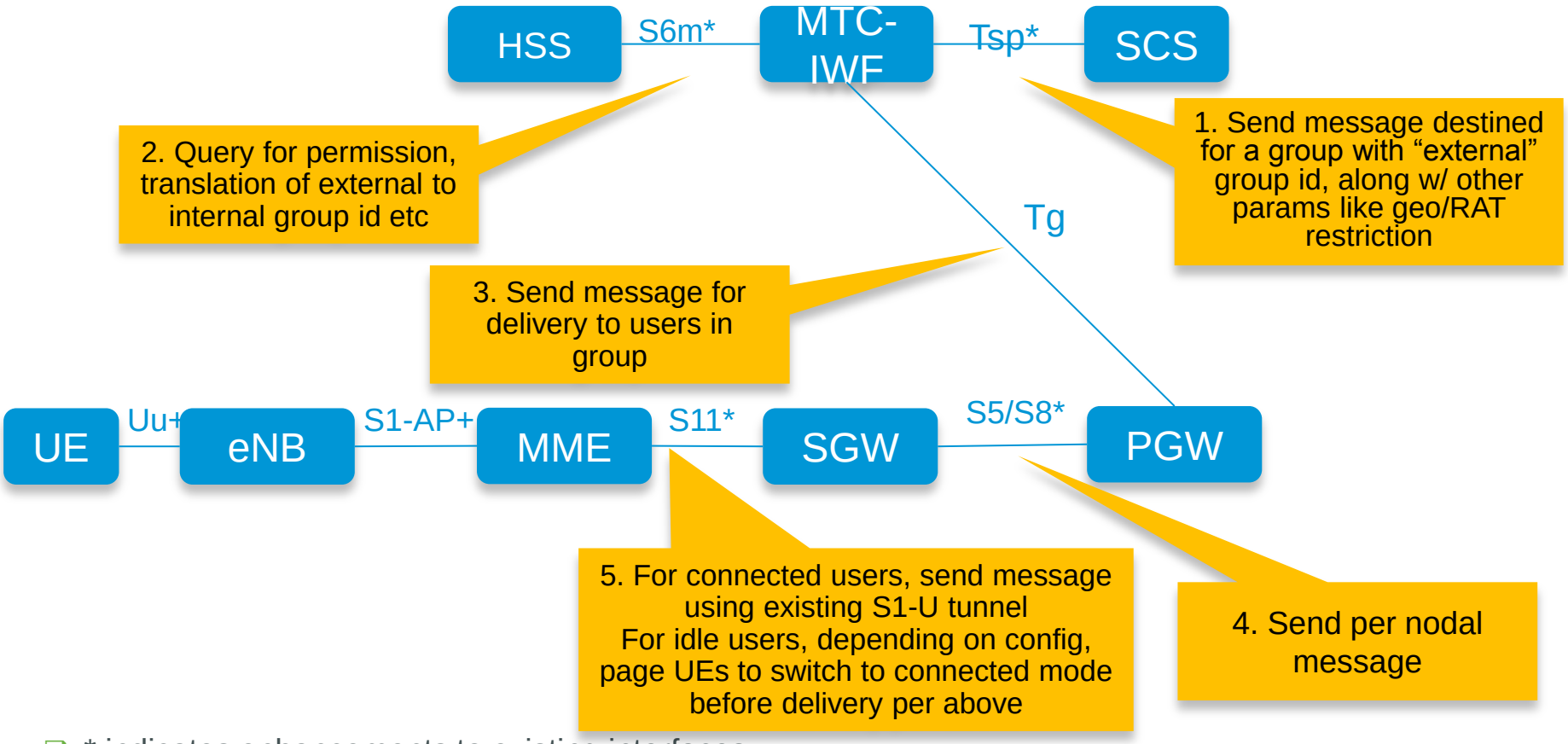

- * indicates enhancements to existing interfaces
- + indicates optional enhancements (which the solution works w/o as well)

© 2010 Cisco and/or its affiliates. All rights reserved.

Rel-13 GROUPE
Base assumptions for the new proposed solution

- UEs belonging to a group have already attached and been granted PDN connection to at least default APN
  - UEs belonging to a group may have more than PDN connection. Which PDN connection to use in order to send the group message is determined via subscription information
- The message originated by SCS (and/or M2M AS behind SCS) is not subject to APN-AMBR or GROUP-AMBR enforcement (per GROUPE TR)
  - MTC-IWF is expected to take care of authorization + charging of such messages
- Actual message from SCS is assumed to be using a connection-less IP-based protocol (eg CoAP) but out of scope from 3GPP packet domain perspective
- Group identifiers used for this key-issue (addressing/messaging) can be different from the group identifiers used for policing (key issue 5.3)

© 2010 Cisco and/or its affiliates. All rights reserved.

Nature on enhancements (1/3)

- Key Concepts
  - Separation of group identifiers used externally for addressing/messaging to that of 3GPP internal group identifiers
  - Notion of “group” PDN tunnel is introduced only on S5/S8 (due to S8 being a roaming interface)
    - Today, GTP "session" is a per UE per PDN connection level granularity
    - We extend this concept for S5/S8 to have a new GROUP-specific TEIDs for control plane, and user plane proposed to be established (*only used for sending messages to users of a group).* Various options (*for Stage 3 to explore)* exists such as
      - Pre-configured / reserved TEID for 1 Group C- and 1 Group U-tunnel (to be used for messages to all groups)
      - Signalling means (e.g: Create/Delete Group Tunnel Request and Response similar to Create Session Request and Resposne) to establish/tear-down TEID for Group C- and U- plane tunnel

(*Choice is left up to Stage 3)*

© 2010 Cisco and/or its affiliates. All rights reserved.

Nature on enhancements (2/3)

- Tsp (SCS – IWF)
  - New Request msg to include (External Group Identifier, SCS Identifier, application layer content of the group message, location/area information, RAT(s) information, source IP address of the originator of message/payload, message validity period)
  - Response msg w/ appropriate cause codes
- S6m* (IWF – HSS)
  - New Request msg (External Group Identifier, SCS Identifier) to check whether SCS is authorized to send msg to the group
  - If groups are defined in HSS, then response includes 3gpp-group-id(s), PGW identities associated w/ users belonging to 3gpp-group-id(s)
- Tg (IWF - PGW)
  - A new interface between MTC-IWF and PGW which carries parameters such as (3gpp-group-id, msg, location/area info, RAT(s) info -- received over Tsp, S6m above) along with actual message payload
    - *Modelled Similar to Tsp*
  - The exact names / nature of request / responses over the Tg interface is left up to Stage 3 and is a matter of protocol details. *Existing protocols such as DIAMETER, or new light-weight protocols such as XMPP etc are possible candidates*

© 2010 Cisco and/or its affiliates. All rights reserved.

Nature on enhancements (3/3)

- S5/S8* (PGW – SGW)
  - No special UE IP address allocation required for UEs in the group
  - No special handling for UEs with IPv4 or IPv6 address (*PAA IE already carries address for v4 and prefix for v6)*
  - For deferred v4 case, PGW needs to inform SGW of UE's ip address
- S11* (SGW – MME)
  - For UEs in that group which are in CONNECTED mode
    - For IPv4 UEs: SGW forwards the user plane data by framing the IP packet with
      - source address: either the user payload's source address received over Tsp or the SGW's own IP address
      - destination address : UE's IPv4 address
    - For IPv6 UEs: SGW forwards the user plane data by framing the IP packet with
      - Source addr: either the user payload's source address received over Tsp or the SGW's own IP address
      - Destination addr: link-local address of UE (FE80 + IID as received from PGW in PAA IE in CSResp)
  - For UEs in that group which are in IDLE mode (*and SGW is configured to perform delivery for IDLE UEs then)*
    - SGW uses TEID of any one of the user belonging to 3gpp-group-id to send a single DDN w/ (3gpp-group-id, TAI/ECGI) to MME
    - Upon receipt, MME knows initiates group paging instead
- S1-AP+ & Uu+ (*RAN scope)*
  - Add 3gpp-group-id, ECGI to PAGING msg
  - MME sends PAGING msg but instead of including individual UEs (max allowed = 16 per RRC specs) identities includes 3gpp-group-id
  - eNB sends PAGING msg
  - UEs (which learn of the group(s) which they belong to during EMM/ESM procedures eg ATTACH, PDN creation etc, respond w/ normal SERVICE REQUEST (to transition to connected mode) depending on which group they'd belong to

© 2010 Cisco and/or its affiliates. All rights reserved.

What do the Group C- and U- plane tunnels look like

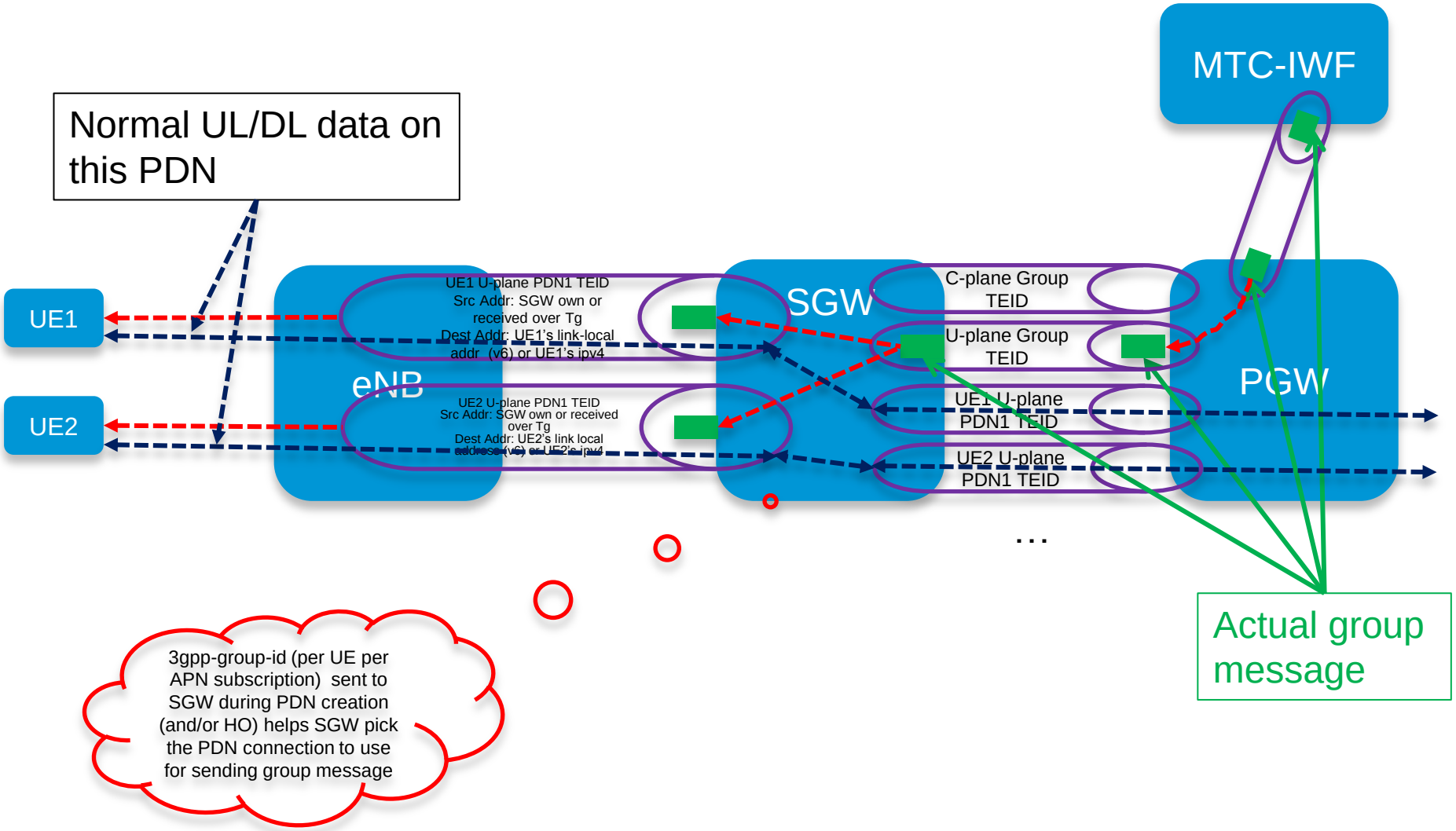

© 2010 Cisco and/or its affiliates. All rights reserved.

How to handle geo/RAT restriction?

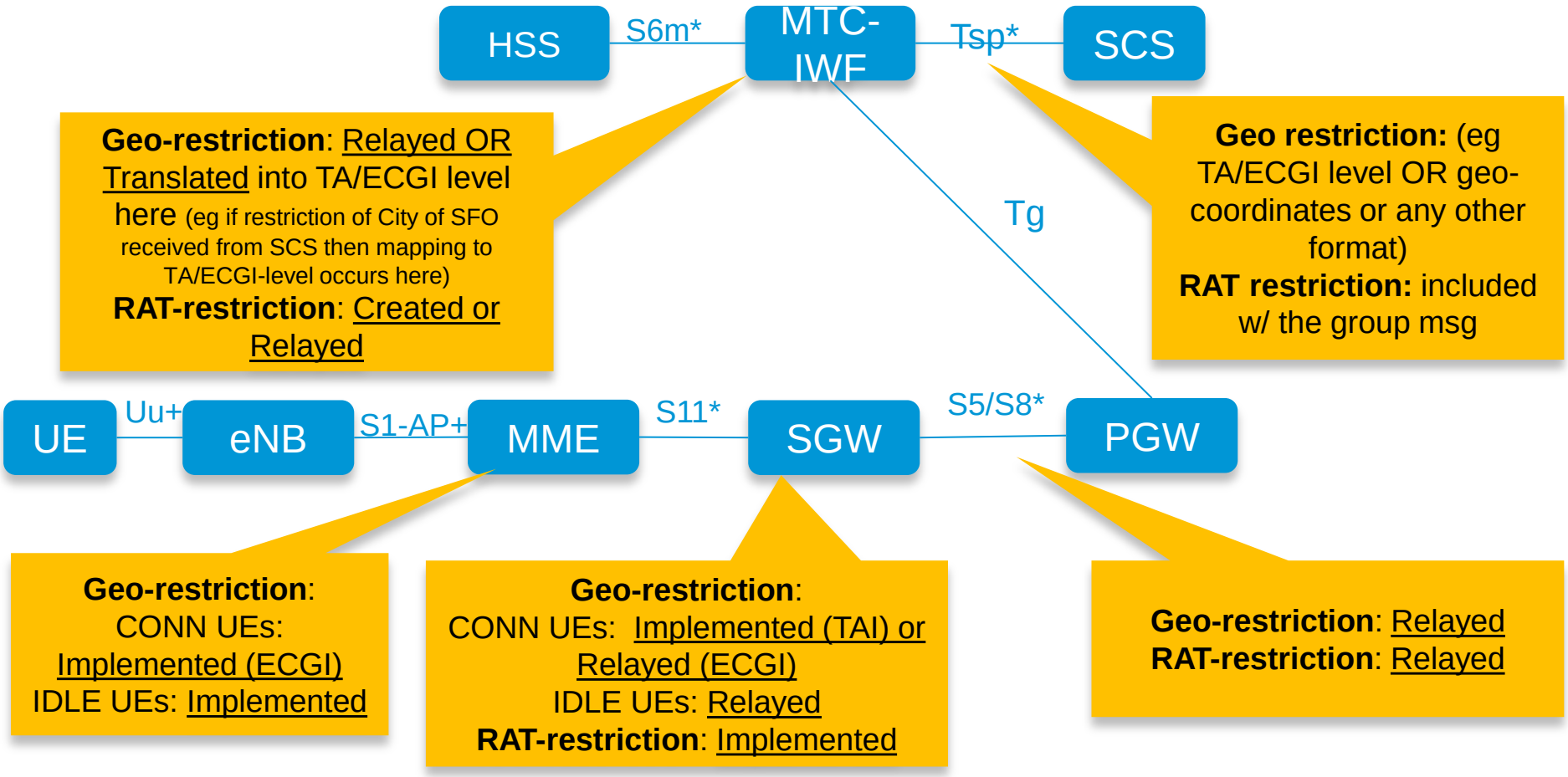

© 2010 Cisco and/or its affiliates. All rights reserved.

High-level call flow for message delivery to users in a group

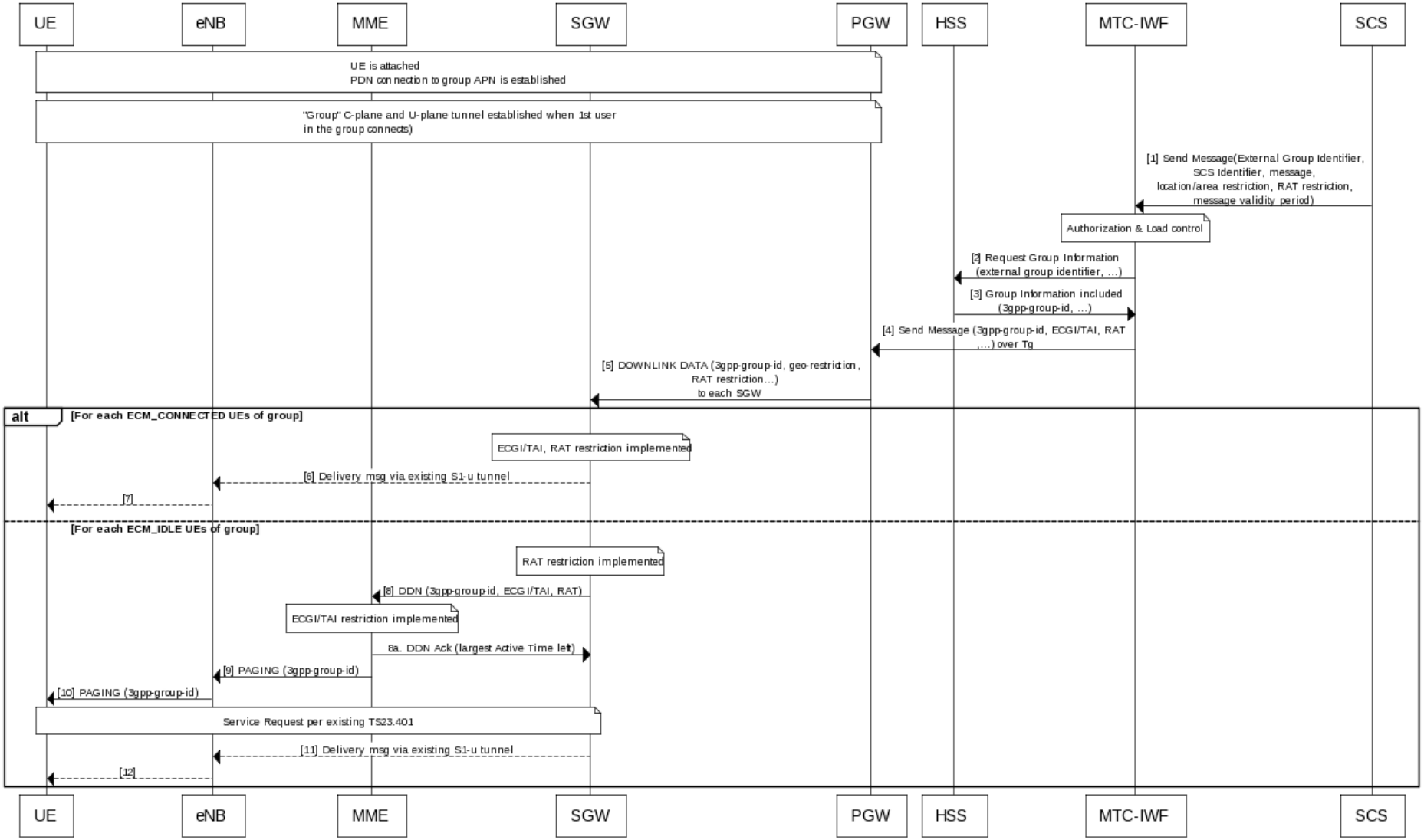

© 2010 Cisco and/or its affiliates. All rights reserved.

High-level call flow for message delivery to ECM-CONNECTED users in a group with ECGI level Geo Restriction

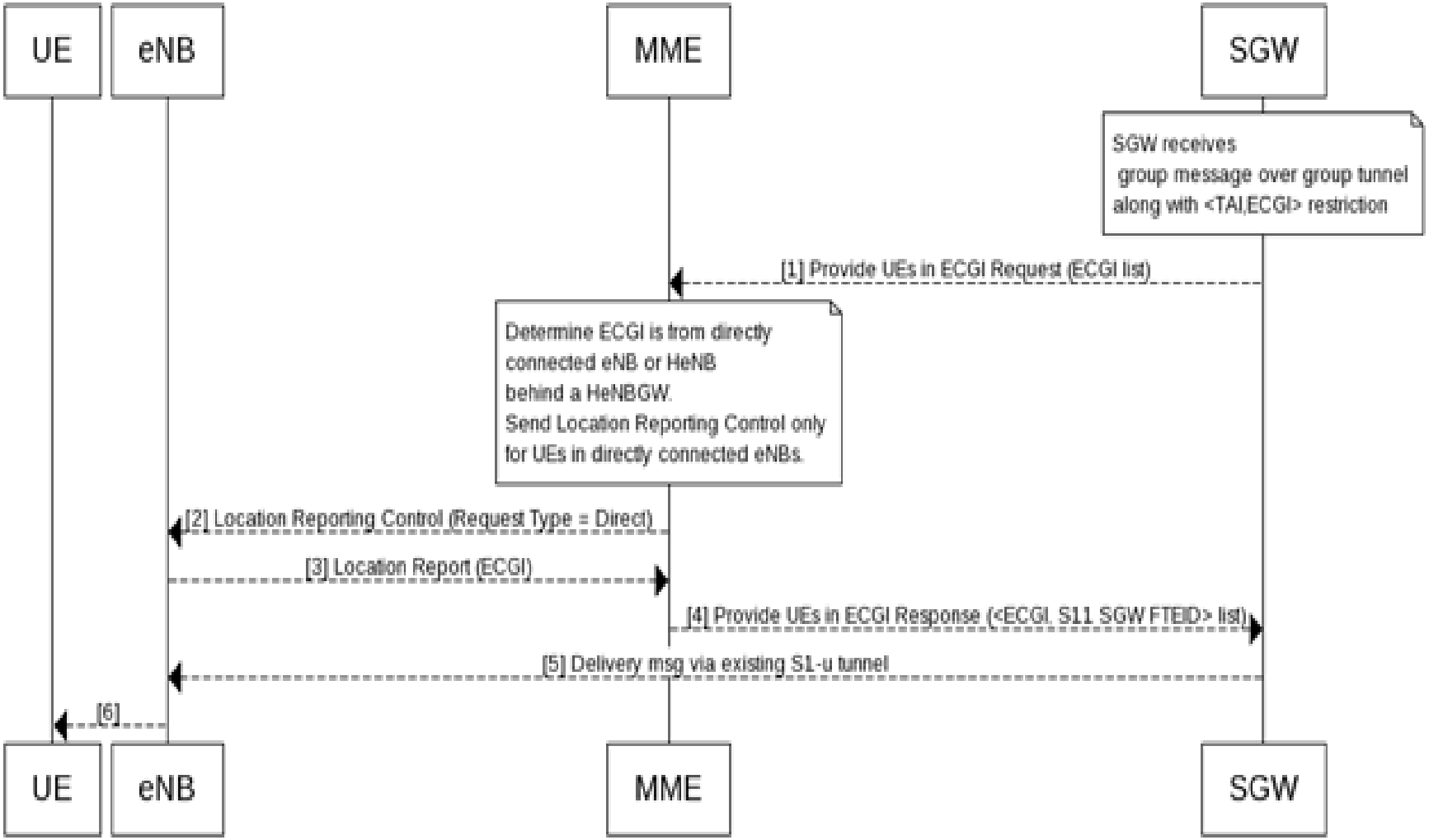

© 2010 Cisco and/or its affiliates. All rights reserved.