3GPP TSG-RAN4 Meeting #54 R4-100761
San Francisco, USA, 22-26 February 2010

Source: Motorola
Title: GSM900 and GSM1800 OTA considerations
Agenda Item: 7.2
Document for: Discussion

1 Introduction

In 3GPP TS25.144 [1] the requirements are defined for "roaming bands" for the speech position (beside the head). These requirements are defined in terms of minimum performance and are mandatory for the frequency bands specified in [1]

Requirements for "operating bands" are dependent on how the network has been built and are operator specific. However, the recommended performance values for operating bands are included in [1] for information. In [1] it also states the ability to meet the recommended performance values are dependant on the number of frequency bands supported by the UE/MS

Currently the roaming (minimum) and operating (recommended) band requirements are not complete for the following combinations; GSM, GSM + LCR TDD and GSM + FDD and are indicated as TBD in [1]. This document provides the background for the proposed values in [2] in order to complete the GSM requirements

2 Background

The key issues in determining the OTA performance are;

a) **Design of UE/MS terminal;** The ability to support a number of form factors which range from wrist phones, clam, candy bar, PDA, data cards and CPE terminals, some of which are used in multiple mechanical modes. The ability to maximize the OTA performance for the key user usage scenario bearing in mode the specification in [1] only addressed next to head operation and does not account for design to support the more normal usage of head + hand and hand operation

b) **Multi band operation;** the antenna performance has to be optimised for all bands and not just the sub-set defined in [1]. In the case of multi-band operation the operating bandwidth of the antenna element will need to increase to support these additional bands. These additional bands which are currently not specified in [1] are; LTE, CDMA, WIMAX etc. In particular as more operational bandwidth/modes are required there is an unavoidable negative impact on the OTA performance of both low-band and high band antenna element due to the necessary compromises of wider operating bandwidth

c) **Support of other modes;** GPS, WLAN, BlueTooth, Broadcast (DVBT/ FM radio) are increasingly being supported in a number of terminals. Antenna support for these modes place additional constraints on overall antenna performance in terms of available volume for the main communication antenna. This issue is not addressed in this document.

d) **Support of diversity and MIMO operation;** Single or dual Tx and Rx antenna operation for UL/DL diversity and MIMO operation are increasingly being required to provide layer 1 performance enhancements in terms of performance and throughput. Dual antenna terminals place additional constraints in terms of antenna performance in terms of volume and coupling and gain imbalance

2.1 Design of UE/MS terminal

The UE/MS radiated performance is determined by; the usage and form factor, the volume, the design of the antenna elements, the interconnection of main conductive portions of entire phone and the

number of operating bands and modes required to be supported by the terminal. It is well understood that about 80% of the radiation performance of a phone is normally derived from the *BODY* of the phone and NOT the antenna element.

Figure 2.1 showing different UE designs for customer usage applications

Most terminals will tend to support a speech mode and hence would need to meet the specification for head OTA irrespective if the main customer usage scenario is different e.g. gaming phone or PDA. If aggressive OTA targets are set for the alternate usage scenario, these targets can easily be found to be too high given the continuing requirements for good UE performance in the speech mode.

2.2 Multi-band operation

Antennas have to be optimised for all bands and not just to a limited sub-set in [1] which cover only a small number of UTRA and GSM bands**.** In this case it is not clear what the applicable UTRA/GSM requirements are, when the UE/MS also supports EUTRA or other technologies such CDMA, WiMax, BlueTooth, MediaFlo, DVB-T, DMBT, GPS, WLAN, FM radio, etc.

The main concern in these cases, there is no guidance on what should be the allowed mitigation path since the main antenna performance would be impacted when supported these additional mode and RAT. In most cases the operating bandwidth of the antenna elements will have to increase to support these new bands/modes and hence the OTA performance will be degrade compared to terminal which only supports a limited sub-set**.** For example if we consider the GSM and TDD bands in Region 3 as shown below in table 2.2.

GSM Bands

3GPP Band	Uplink (UL) band UE transmit (MHz)			Downlink (DL) band UE receive (MHz)		
DCS1800	1850	–	1910	1930	–	1990
GSM900	880	–	915	925	–	960

E-UTRA / UTRA Bands

34	2010	–	2025	2010	–	2025
38 ?	2570	–	2620	2570	–	2620
40	2300	–	2400	2300	–	2400

Table 2.2-1 Region 2 OTA bands

However terminal still needs to support other deployment scenarios. For example Region 2 potential operating bands are GSM900, GSM1800, TD-SCDMA (3GPP band 34) and LTE TDD (3GPP band 40) + possibly other IMT bands for roaming. Other region 2 operators will need support of UTRA and GSM for roaming and may need to also support CDMA global roaming.

If we consider table 2.2-1, the Antenna % bandwidth is shown below for these potential operating bands

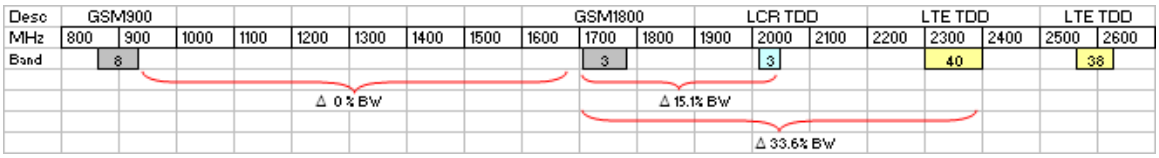

Table 2.2-2 showing potential CMCC operating bands

High band (GSM1800) antenna design will require a 15.1% antenna bandwidth to support operation in Band 34 and a 33.6% antenna bandwidth to support LTE TDD in Band 40. Current band 2, 3 high-band antennas require two poles to achieve the necessary bandwidth. The drawing below shows a typical bottom mounted band 2, 3 high-band antenna along with the S11 plot of such an antenna.

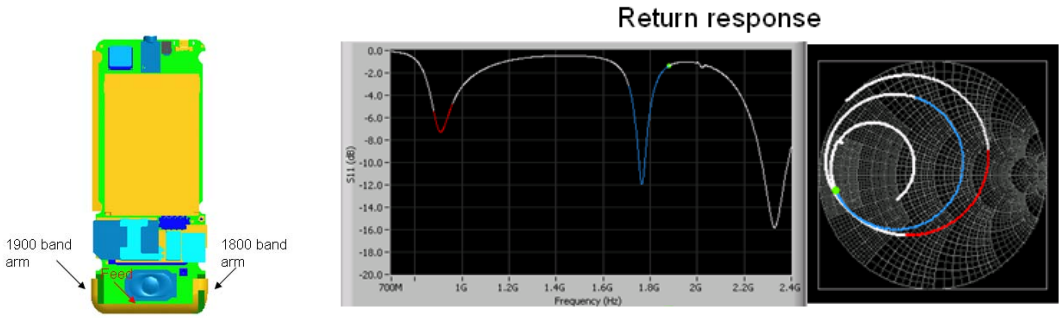

Figure2.2-1 showing Tri-band high-band antenna

The drawing and S11 plot below shows the same high-band antenna with an additional element (pole) added to increase the bandwidth to cover bands 34 & 40.

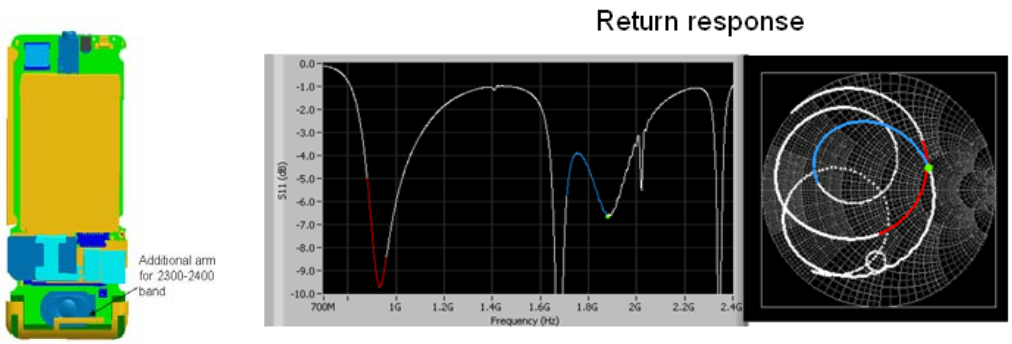

Figure2.2-2 showing Quad-band high-band antenna

There are several consequences of adding a 3rd high-band element:

1) The OTA performance of 105 UEs is presented in *OTA TRP and TRS requirements for GSM 900 and 1800*: *Orange, Telecom Italia, Vodafone, China Mobile* [2]. All of the UEs measured [3] are quad-band GSM/WCDMA UEs. The addition of band 34 & 40 will primarily benefit data centric devices which have a different use mode compared to the predominately voice UEs in [1]. The figure 2.2-3 below shows the human factors observed typical grip used for PDA devices in the browsing mode, and used in CTIA as the "PDA" grip [4].

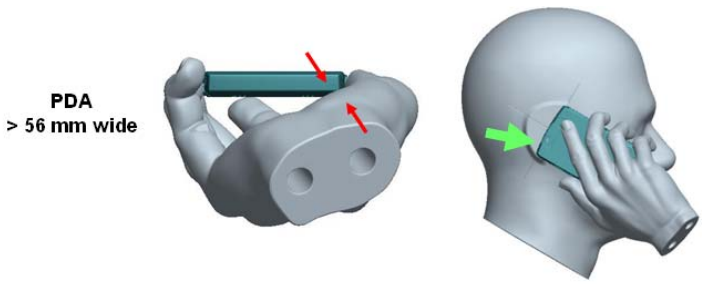

Figure 2.2-3 showing CTIA "PDA" hand and close distance to the palm at bottom of UE in "talk position" and "PDA browsing position"

2) Locating the band 34 & 40 antennas at the bottom end of a PDA UE will result in a poor data performance due to the proximity of the users hand to the high-band antenna. The consequence is that the antenna designer is likely to put the low-band on the bottom end of the

UE, and high-band antenna on the top end of the UE to mitigate this effect. See the below figure 2.2-4 for such an implementation and S11 plots of the low-band and high-band antennas. This requires a transmission line run to one of the two antennas. But with the RF front end being placed nearest the high-band antenna for lowest transmission line loss as the obvious choice, the low-band antenna will be fed via a transmission line. Typical transmission line loss to the low-band antenna is 0.5-1.0dB in such an implementation.

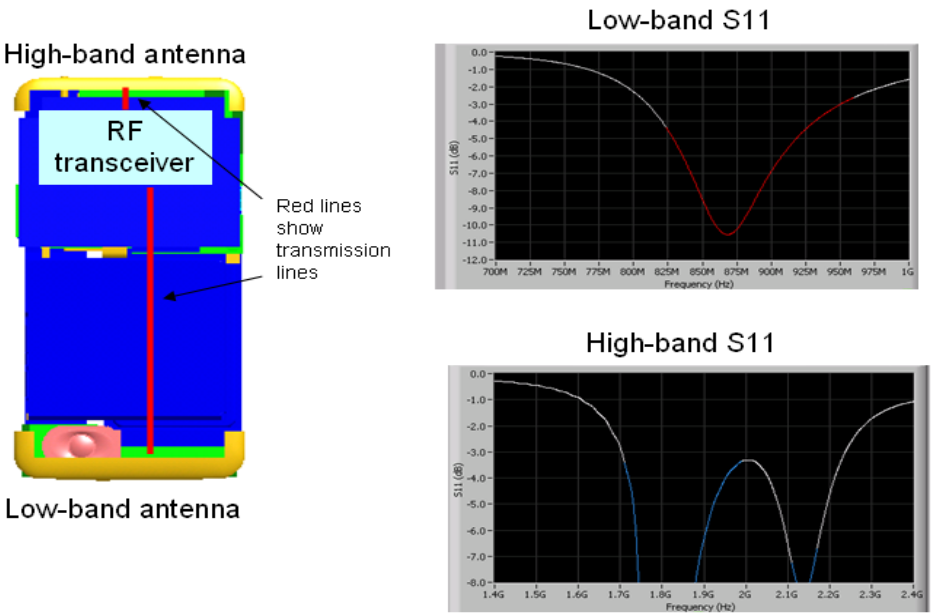

Figure 2.2-4 showing possible design to support multi-band support

3) It is possible to keep both the low-band and high-band antennas located at the bottom of the UE if extra volume is allocated to those antennas. However this may not acceptable to the user in the data user mode. Also the addition of bands 34 & 40 to a dual-band high-band antenna will require the splitting of RF to the TD-SCMA and LTE radios. Any such additional switching or RF splitting typically results in additional loss to the low-band on the order of 0.25dB.

4) Simulations and practical experience with the addition of bands 34 & 40 to a band 2, 3 antenna results in a much wider rotation of the S11 plot. See the S11 plots of tri-band and quad-band high-band antennas in figure 2.2-1 and figure 2.2-2. Obviously in both cases the antenna S11 needs to be matched to 50 ohm RF circuitry. The need to match a wider rotation of S11 over the wider frequency range of the quad-band antenna nearly certainly results in a matching network with more components and higher loss. As it is expected that band 34 TD-SCMA and band 40 LTE would be the bands of greatest interest in new LTE enabled handsets, then the low-band matching would be compromised to meet this requirement.

5) For similar reasons, the need to match the S11 of the PA for “load pull” is of greater difficulty with the wider bandwidth at high-band. Even if multiple PA’s are used in the UE for the bands 2 & 3, and 34 and 40 transmitters, the GSM/WCDMA PA still has to be matched to the band 2, 3, 5 & 8 antenna S11 curves, and be optimized for PA efficiency. The increase in complexity of the “load pull” matching problem is nearly doubled just by the addition of band 40.

6) Most modern UE’s use a forward Tx power detector in cooperation with an Automatic Output Circuit (AOC) to adjust the Tx power out to the high tolerances required by 3GPP. The addition of band 40 not only increases the necessary bandwidth of the forward power detector, but is considerably more complicated by the high swings in S11 rotation in-between the antenna and PA for both the new band 40 and the conventional low-bands.

In the above example we have focused on Region 3, however similar considerations are also applicable

in region 1 see Table 2.2-2. In fact the numbers of supporting bands are more and so is the total operating frequency range

3GPP Band	Uplink (UL) band			Downlink (DL) band		
	$F_{UL_low} - F_{UL_high}$ (MHz)			$F_{DL_low} - F_{DL_high}$(MHz)		
GSM1800	1710	–	1785	1805	–	1880
GSM900	880	–	915	925	–	960
E-UTRA						
20	832	–	862	791	–	821
1	1920	–	1980	2110	–	2170
34	2010	–	2025	2010	–	2025
7	2500	–	2570	2620	–	2690
38	2570	–	2620	2570	–	2620

Table 2.2-2 Region 1 OTA bands

It is for the reasons that Motorola believes that an increase of TRP above the values proposed in [2] of much greater than 19.5dBm for a UE incorporating other bands would need some additional compromises. The compromises that would be necessary are: UE size, UE cost and performance on these non GSM bands

2.3 Support of diversity and MIMO operation

a) **Rx diversity /MIMO** provide improved performance for both static and dynamic conditions. In [1] there is no performance delta specified for Rx diversity/MIMO OTA. Volume increase due to increased component count and additional Rx2 element _ shown in red dotted box

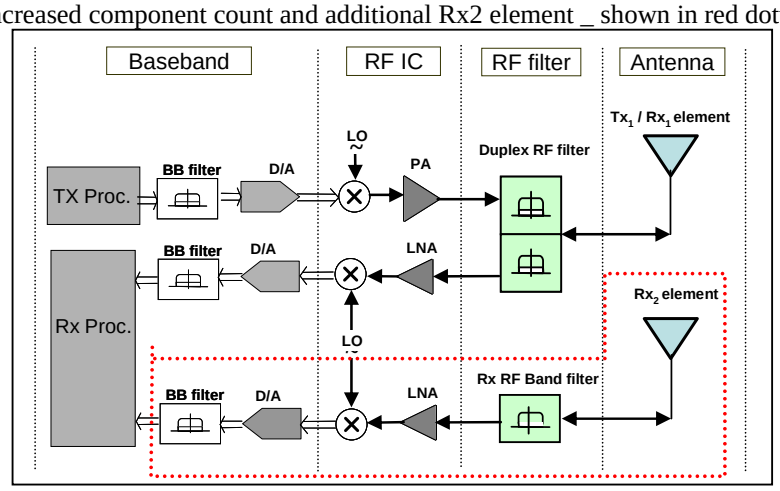

Figure 2.3-1 showing additional antenna element and component/volume for Diversity

Current specification [1] only supports single antenna performance implementation. Dual Rx antenna will impact single antenna performance for reason explained above

b) **Tx diversity / MIMO** provides improved performance and system throughput**.** Volume increase due to increased component count and additional Tx2 element shown in red dotted box

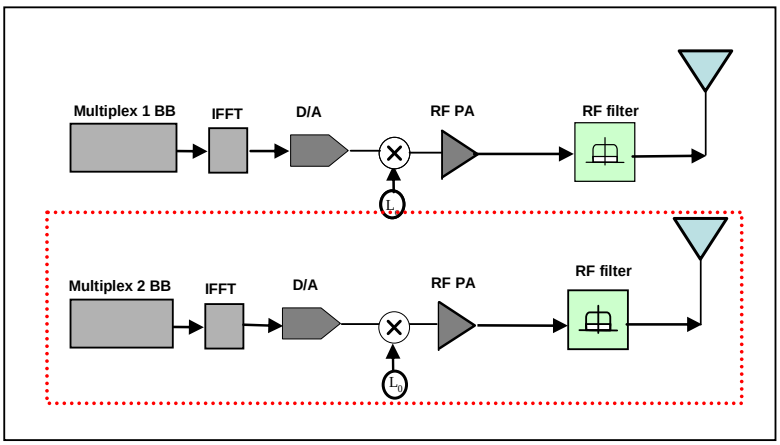

Figure 2.3-2 showing additional antenna element and component/volume for MIMO

Current specification does not support Tx diversity implementation. No performance delta is allowed for Tx diversity OTA performance. Dual Tx antenna will impact single antenna OTA performance

In the case of Diversity and MIMO operation the radiated performance depends on number of antenna used to support the Tx and Rx Antenna element. Single antenna radiated performance if not set correctly will disadvantage dual antenna phones due to the reduced antenna volume available for each antenna element

2.4 Proposed limits for GSM900 and GSM1800 OTA requirements

The antenna design requirements of multiband UE's has been explored and found to show that the addition of new bands into multiband UE's has a necessarily negative performance degradation of the low-band antenna efficiency. In [2] the following values for minimum and recommended OTR were proposed Nokia, RIM, LGE, Samsung, and Motorola)

Minimum performance for GSM roaming bands in the speech position and the primary mechanical mode

TRP minimum performance

Operating band	Power Class 1		Power Class 2		Power Class 3		Power Class 4		Power Class 5	
	Power (dBm)		Power (dBm)		Power (dBm)		Power (dBm)		Power (dBm)	
	Average	Min	Average	Min	Average	Min	Average	Min	Average	Min
GSM 850							18.5	16		
GSM 900							18.5	16.5		
DCS 1800	19.5	17.5								
PCS 1900	19.5	17.5								
NOTE: applicable for dual-mode GSM/UMTS.										

TRS minimum requirement

Operating Band	Unit	<REFI$_{or}$>	
		Average	Max
GSM 850	dBm	-96	-93
GSM 900	dBm	-96	-93
DCS 1800	dBm	-99	-96
PCS 1900	dBm	-98	-95
NOTE 1 For Power Class 1 and 4			
NOTE2 Applicable for dual-mode			

TRP recommended performance

Operating band	Power Class 1	Power Class 2	Power Class 3	Power Class 4	Power Class 5
	Power (dBm)	Power (dBm)	Power (dBm)	Power (dBm)	Power (dBm)
	Average	Average	Average	Average	Average
GSM 850				22	
GSM 900				22.5	
DCS 1800	22.5				
PCS 1900	22.5				

TRS recommended performance

Operating Band	Unit	<REFI$_{or}$>
		Average
GSM 850	dBm	-99
GSM 900	dBm	-100
DCS 1800	dBm	-101
PCS 1900	dBm	-101
NOTE: applicable for dual-mode GSM/UMTS.		

and the primary mechanical mode

Operating band	Power Class 1		Power Class 2		Power Class 3		Power Class 4		Power Class 5	
	Power (dBm)		Power (dBm)		Power (dBm)		Power (dBm)		Power (dBm)	
	Average	Min	Average	Min	Average	Min	Average	Min	Average	Min
GSM 850							18.5	16		
GSM 900							19.5	17.5		
DCS 1800	20	18								
PCS 1900	20	18								
NOTE: applicable for dual-mode GSM/UMTS.										

Table 2.4 Proposed OTR requirements in [2]

3 Conclusion

Radiated performance depends on many phone design factors and especially the human usage

- Antenna has to be optimised for all 3GPP bands and not just a sub-set in TS25.144
- 3GPP specifications specifies head operation only, however vendors have to optimise for all combinations; head & hand for speech mode and hand for SMS/data mode.
- Single or dual Tx and Rx antenna operation for UL/DL diversity and MIMO operation place additional constraints on antenna performance and UE/MS volume and form factor
- Standardization of proper radiated performance metrics is very important to Operator, customer and Motorola
- Radiated performance if not set correctly will disadvantage all parties; operators, customers and vendors

It is for the reasons above that Motorola strongly believes that an increase of TRP above the values proposed in [2] of much greater than 19.5dBm for a UE incorporating non GSM bands would require some additional compromises. The compromises that would be necessary are: UE size, UE cost and performance

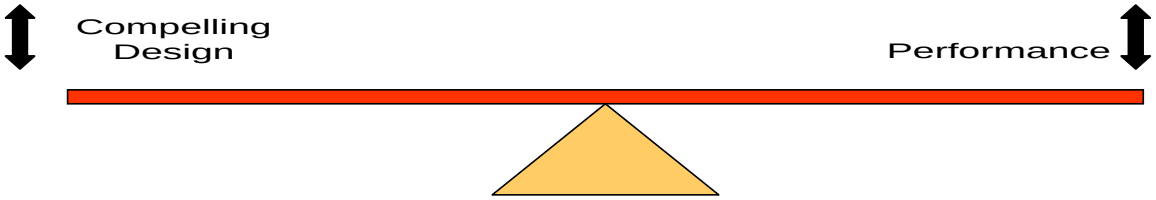

4 References

[1] 3GPP TR 25.914 V7.0.0 (2006-06); Measurements of radio performances for UMTS terminals in speech mode

[2] R4-091472; Compromise proposal. Nokia, RIM, Samsung, Motorola

[3] R4-091762; OTA TRP and TRS requirements for GSM 900 and 1800: Orange, Telecom Italia, Vodafone, China Mobile

[4] 3GPP TS 45.005 v9.0.0 3rd Generation Partnership Project; Technical Specification Group GSM/EDGE Radio Access Network; Radio transmission and reception (Release 9)