3GPP TSG RAN1#41 Meeting
Athens, Greece, May 9-13 2005

Document: R1-050397

Agenda Item: 13.2
Source: Motorola

Title: Uplink Numerology and Frame Structure

Document for: Discussion

Desirable Uplink Characteristics

- Moderate peak-to-average power ratio (PAPR) or cubic metric (CM)
  - reduce cost, size, heat dissipation, current drain of UE power amplifier
  - E.g. equivalent to Release99 or Release 5 PA headroom
- Orthogonal uplink transmission
  - minimizes intra-cell interference → maximize capacity
- Minimize inter-cell interference by interference control
- Flexibility - support a wide range of data rates, and enable data rate to be traded for Eb/No
- Support for adaptive modulation and HARQ
- Exploit frequency diversity of wideband channel (e.g. 20 MHz) for low data rate users
- Support for frequency-selective scheduling
- Support for advanced multiple antenna techniques

Preferred Options

- Single-carrier based approaches with Cyclic prefix
  - DFT-SOFDM with restrictions on sub-carrier mapping to maintain low PAPR/CM
  - IFDMA with block repetition factor >= 1

EUTRA UL Multiple Access – Key Drivers

- **Scalable Bandwidth**
  - **Support 1.25, 2.5, 5, 10, 15, and 20 MHz**
  - **Prefer same sub-carrier spacing and symbol duration for all bandwidth modes**
  - **Scale number of sub-carriers and sample rate**
- **Radio frame divided into sub-frames (similar to our downlink proposal)**
  - **e.g., twenty 0.5 ms sub-frames**
- **Scheduling Interval (Frame Duration): 0.5 to 3 ms**
  - **Long frame and short frame from integer number of sub-frames**
- **Guard Interval**
  - **Prefer longer Guard interval than the downlink to take in to account the relative timing error between uplink transmissions of different users**
    - Timing advance estimation error at the Node-B
    - For symmetry, same guard interval may be preferable (~ 5 us)
- **IFDMA Chip Rate**
  - **3.84 Mcps (4.096 Mcps under study)**
- **Subcarrier Spacing**
  - **Lower bound of sub-carrier spacing appears to be ~10kHz**
  - **Phase noise not a major concern**
  - **Doppler and Transmitter EVM may be a limiting element for link achievable SNR**
- **Efficient TDM of pilot, control and contention channel**

IFDMA

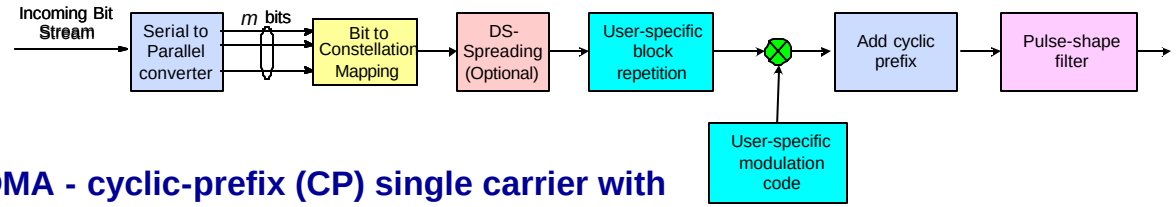

- **IFDMA - cyclic-prefix (CP) single carrier with special block repetition to create a "comb" spectrum, which is interleaved with other users**
- **A hybrid of single carrier and OFDM concepts**
  - **Same PAPR or CM as single carrier**
  - **Requires CP and non-zero signal spectrum on certain "sub-carriers" as in OFDM**

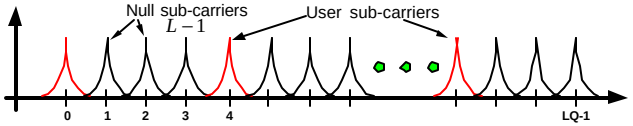

- **Orthogonal uplink as each user is assigned set of sub-carriers orthogonal to other users**
- **IFDMA repetition factors plus optional DS-spreading exploits frequency diversity and support of lower data rates**
- **Receiver is based on FDE e.g. MMSE type**

DFT Spread-OFDM (1 of 2)

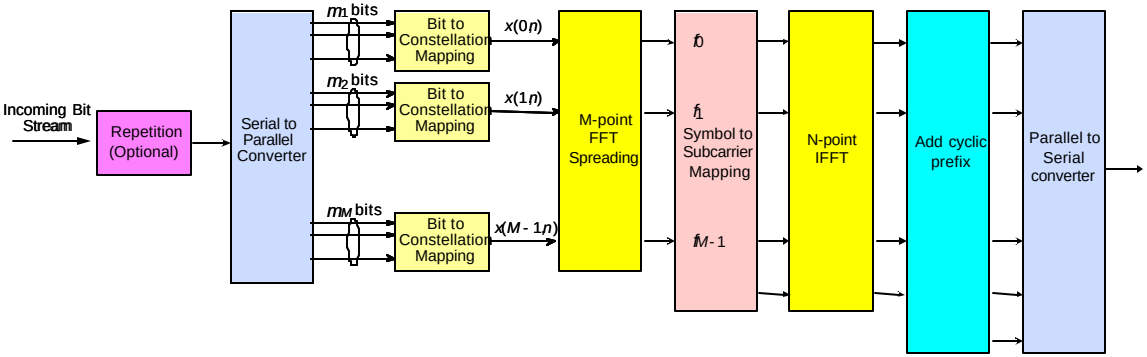

- **DFT spreading of data symbols in frequency-domain**
- **Preferred sub-carrier mapping to reduce PAPR/CM**
  - **Equally spaced sub-carriers**
    - Provides frequency diversity
    - Transmit signal similar to IFDMA
  - **Adjacent group of sub-carriers**
    - Supports frequency-specific scheduling
    - Transmit signal similar to single-carrier
- **Optional repetition provides processing gain for users in bad conditions**
- **MMSE equalization to restore code orthogonality**

DFT Spread-OFDM (2 of 2)

- DFT-SOFDM is "functionally" equivalent to IFDMA but has differences in Numerology due to frequency-domain implementation

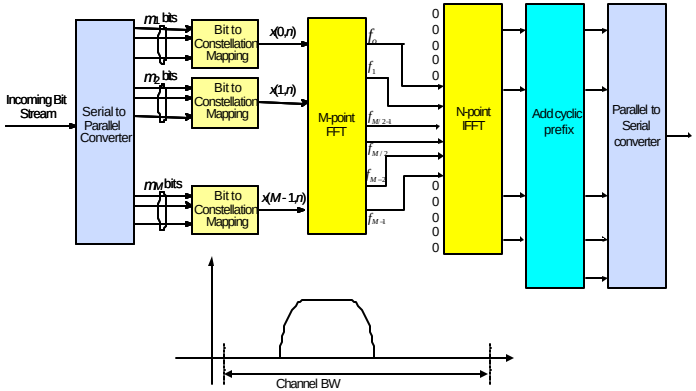

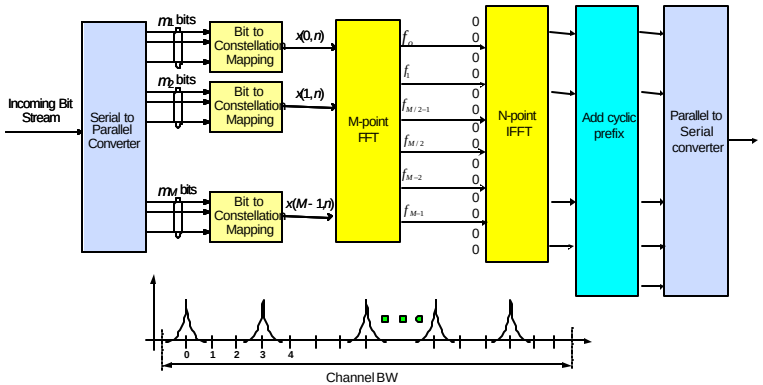

- Adjacent sub-carrier mapping
- Similar to narrowband single-carrier with cyclic-prefix (or IFDMA with repetition factor = 1)

- Equally-spaced sub-carrier mapping
- Similar to IFDMA with repetition factor > 1

Example Radio Frame Structure: UPLINK

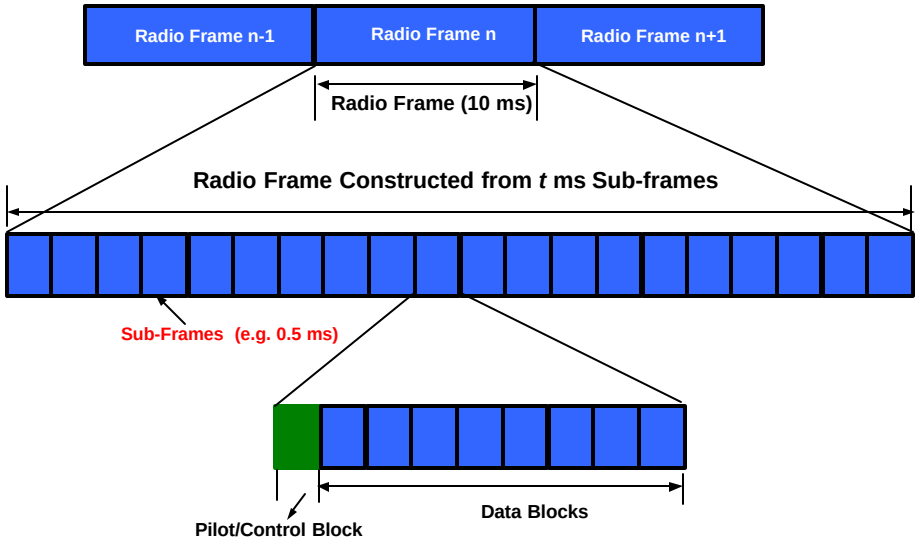

- Radio frames = composed of *x* sub-frames of *t* ms duration each (e.g. *t*=0.5ms)
- Consider using both short and long frames
  - Short frames consist of 1 sub-frame
  - Long frames consist of multiple sub-frames
- Short or long frames optimized according to QoS
  - Short frame for lowest latency, small packets, or fast AMC/FS/MIMO (med speed)
  - Long frame for large packets, lower control overhead, fast AMC/FS/MIMO (low speed), avoids fragmentation, edge of cell operation
- Multiple FFT Blocks per sub-frame

Uplink Single Carrier Numerology

- Proposed IFDMA numerology is FFS
- Note that the proposed numerology for IFDMA will be slightly different than the OFDM downlink numerology due to differences in signal construction and sampling rates
- Since DFT-SOFDM is based on the same fundamental processing as OFDM, it is possible to use the same numerology as the downlink
- For DFT-SOFDM, we propose to use the same numerology as the Downlink OFDM
  - Ref: R1-050396 for downlink OFDM numerology
  - Subcarrier spacing ~ 17-23 kHz
  - Occupied BW ~90% of nominal BW (FFS)

IFDMA Numerology for 0.5 ms sub-frame (Preliminary)

- **Option 1**
  - **3.84 Msps sample rate (5 MHz)**
  - **20 kHz sub-carrier separation**
  - **5.21 us cyclic prefix**
  - **Mixed radix FFT**

		Carrier Bandwidth (MHz)					
Parameter	*Unit*	*20*	*15*	*10*	*5*	*2.5*	*1.25*
Frame duration	*ms*	*0.5*	*0.5*	*0.5*	*0.5*	*0.5*	*0.5*
Chip Rate	Mcps	15.36	11.52	7.68	3.84	1.92	0.96
FFT size		768	576	384	192	96	48
# of Blocks /per 0.5ms		9	9	9	9	9	9
Freq spacing	**kHz**	20	20	20	20	20	20
Minimum guard interval	**us**	5.21	5.21	5.21	5.21	5.21	5.21
Minimum guard chips		80	60	40	20	10	5
Percent guard interval	**%**	10	10	10	10	10	10
Max 16QAM data Rate (R=1)	**Mbps**	55.296	41.472	27.648	13.824	6.912	3.456

- **Possible Option 2**
  - **4.096 Msps sample rate (5 MHz) provides higher throughput but spectral mask is FFS**

- **Scheduling Granularity**
  - **Localized FDMA**
    - **Time domain : 0.5ms**
    - **Frequency domain: 480 kHz (FFS)**

Uplink Summary

- **Preferred Multiple Access Scheme Options**
  - **IFDMA**
  - **DFT-SOFDM (Localized and Distributed FDMA)**
- **Short and long frames**
- **Carrier Spacing of approximately 20 kHz**
- **Multiple FFT Blocks per sub-frame**
- **Efficient TDM of pilot, control and contention channel**
- **Different numerology for IFDMA due to differences in sampling rates**