3GPP TSG RAN Meeting #66
Maui, USA, 8 – 11 December, 2014

RP-141912

Document for: Discussion
Agenda Item: 14.1.1

Motivation for New WI on LTE bandwidth flexibility enhancements

Huawei, China Unicom, HiSilicon

RAN#66 WI Proposal (RP-141911)

- This proposal was formerly submitted for information in RP-141365. It is now submitted for approval as a Rel-13 WI.
- Considering feedback received in earlier meetings, the proposal is re-focused on physical layer aspects. This motivation paper addresses comments received at RAN65 on the RAN4 impact.
- Considering discussions on LTE bandwidth flexibility in earlier releases (NCT, carrier segment), it is proposed to maintain backward compatibility and to avoid changes to UE RF bandwidth.

Use Cases and Performance Gain

Example: GSM gradual re-farming: licensed spectrum sharing within one operator's network. The available spectrum block size for LTE is not one of the legacy LTE bandwidths.

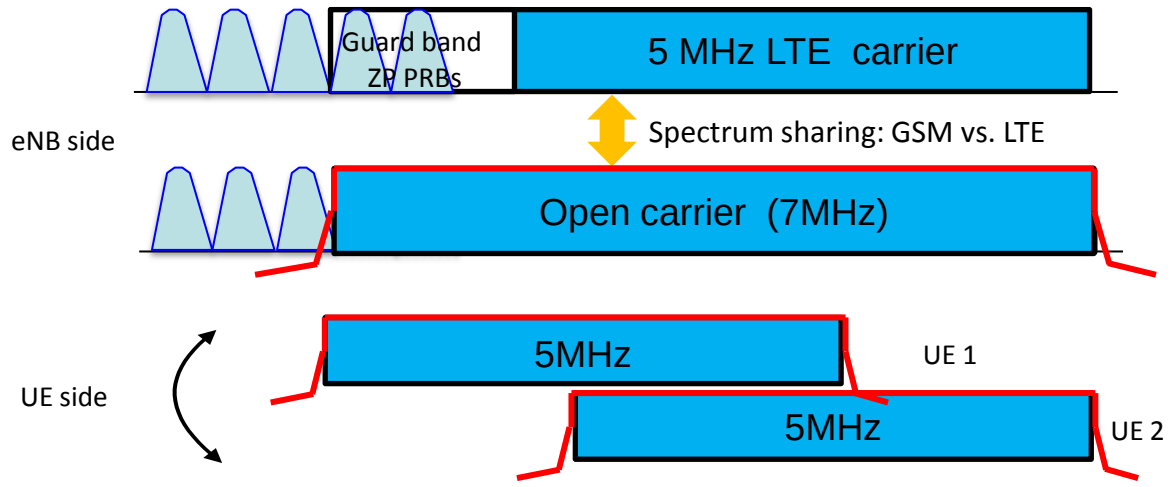

Performance Gain: Example for a 7 MHz block

Available bandwidth (MHz)	LTE Baseline 1	Open Carrier	Network gain (example A)
7	1x5 MHz carrier Usable: 4.5 MHz	6.3 MHz (+40%)	**40%**

Available bandwidth (MHz)	LTE Baseline 2	Open Carrier	UE gain (5 MHz filter)
7	2x3 MHz carriers Usable: 5.4 MHz	6.3 MHz (+17%)	**67%** (4.5 vs. 2.7 MHz)

Backward Compatible Support

- Downlink transmission of common control channels and common reference signals is limited to a contiguous set of PRBs that correspond to a legacy system bandwidth size
- Downlink transmission of PDSCH and EPDCCH in any available PRB
- Legacy UEs can access and operate on the part of the carrier where PRBs carry common control channels and common reference signals
- UEs supporting the new solution can access and operate on a set of PRBs that occupy a part of the carrier spanning a bandwidth equal to a legacy system bandwidth size

BS Side: RF Impact

Case 1 – Adjacent channel is not a guard band

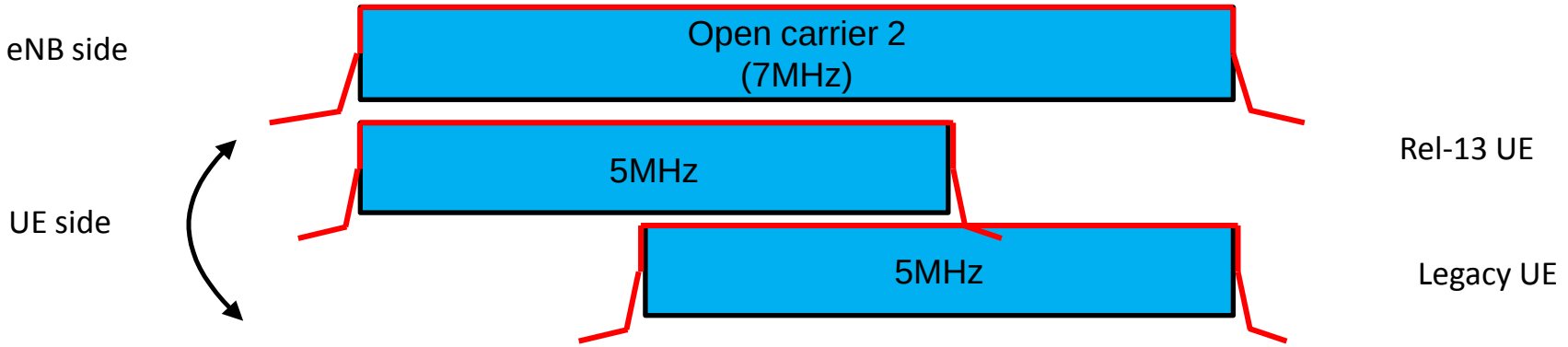

- BS transmitter requirements
  - In current specifications, for Channel Bandwidth (CBW) larger than or equal to 5MHz, one uniform emission mask is defined. As long as the new BW is larger than 5MHz, this mask can be re-used.
  - For the case 1.4MHz<CBW<5MHz, a new mask shall be defined using the same approach described in TR36.804.

BS Side: RF Impact

Case 1 – Adjacent channel is not a guard band

- BS receiver requirements
  - In current spec, the BS receiver requirements are defined based on 25 RB for CBW no less than 5MHz. Hence for new CBW larger than 5MHz the receiver requirements can be re-used.
  - For 3MHz<CBW<5MHz, the receiver requirements based on 15RB can be re-used.
  - For 1.4MHz<CBW<3MHz, the receiver requirements based on 6RB can be re-used.
- Guard band
  - As other cases when CBW >= 3MHz, 10% CBW will be used as guard band. The implementation complexity of filter will be the same.
  - For 1.4MHz<CBW<3MHz, the guard band shall be further studied.
- The support of new CBW will be a manufacture declarable option.

BS Side: RF Impact

Case 2 – Adjacent channel is a guard band

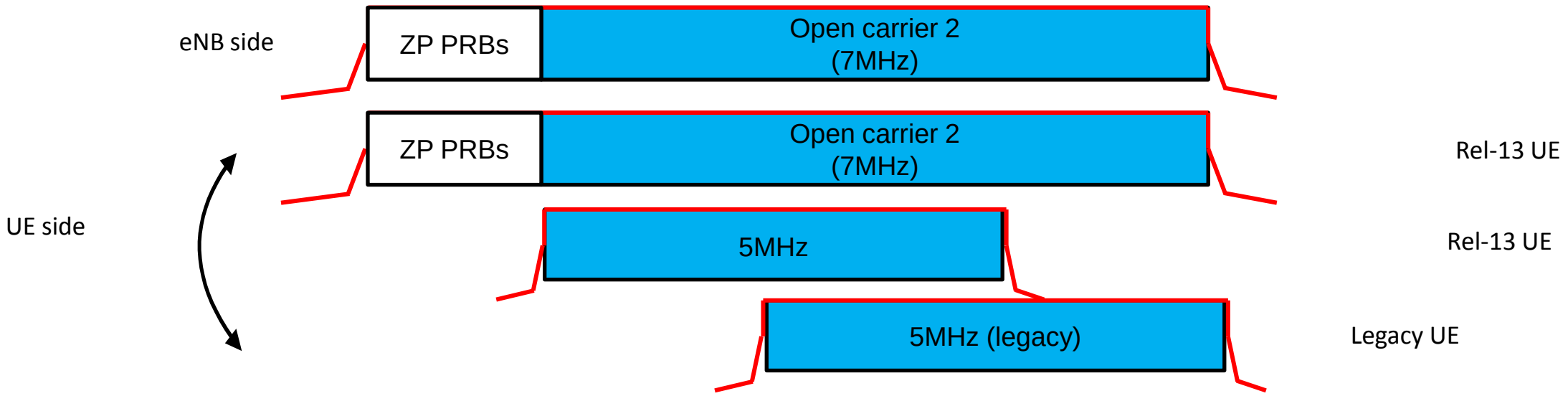

- Legacy channel bandwidths are re-used
- Existing RF requirements can guarantee co-existence with adjacent systems
- Less impact from RAN4 point of view

UE Side: RF Impact

Case 1 – Adjacent channel is not a guard band

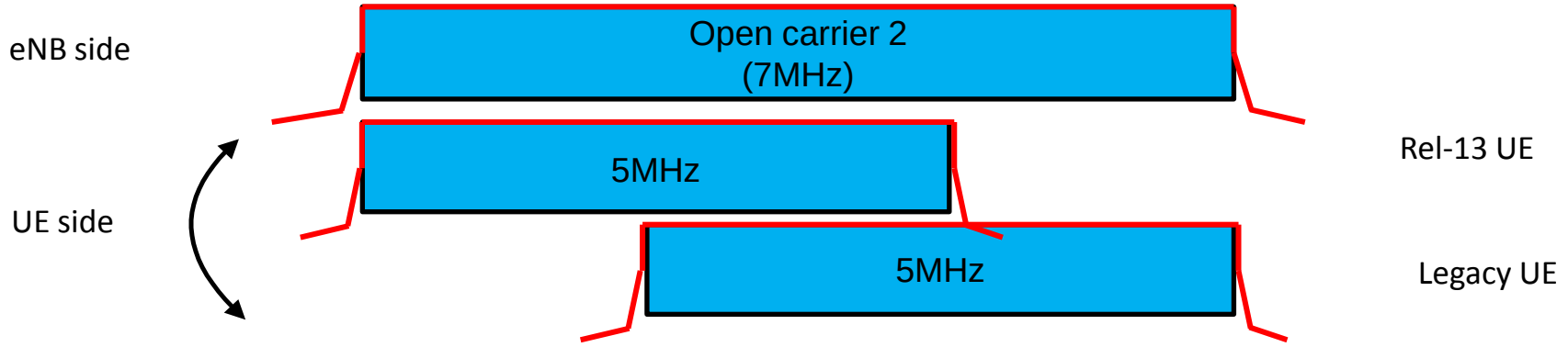

- Legacy channel bandwidths are re-used and existing UE RF requirements such as transmitter unwanted emission and receiver blocking requirements can be re-used.
- Less impact to UE implementation.
- The overlapping bandwidth of Rel-13 UE and legacy UE will not bring more mutual interference than when different UEs transmit partial bandwidth within one legacy carrier.
  - The sub-carriers are orthogonal.
  - The filter provides additional attenuation.

UE Side: RF Impact

Case 2 – Adjacent channel is a guard band

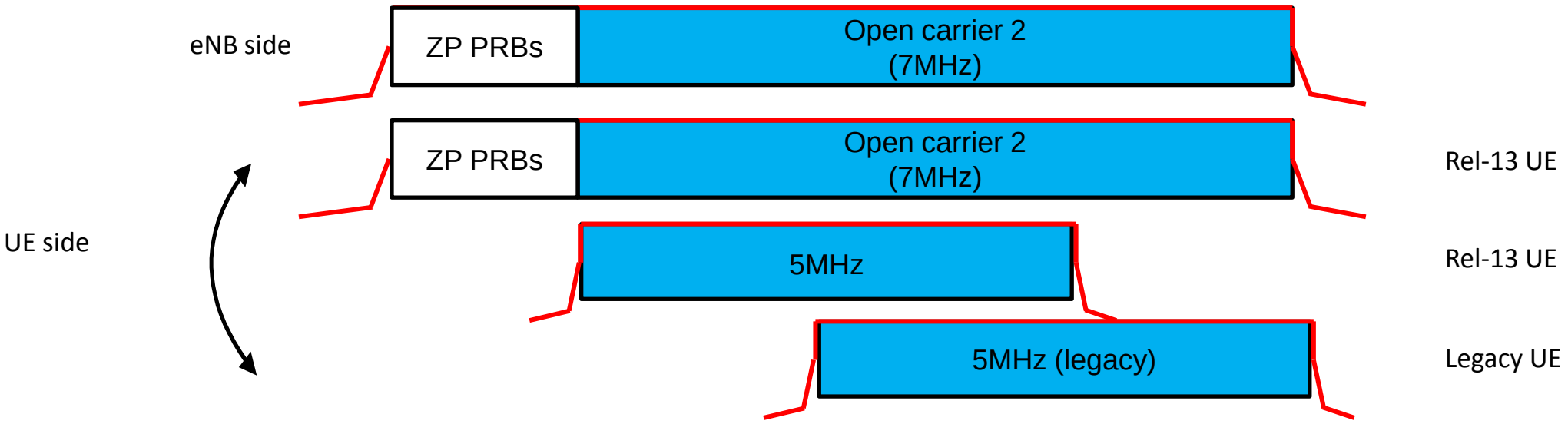

- Legacy channel bandwidths are re-used.
- Existing UE RF requirements can be re-used.

Proposed RAN Workplan

- 6 WG meetings for RAN1/2/4 core work
  - From RAN66 (Dec 2014) to RAN70 (January 2015)

All RRC impact completed ↓ All core aspects completed ↓

	WG meeting 1	WG meeting 2	WG meeting 3	WG meeting 4	WG meeting 5	WG meeting 6	WG meeting 7	WG meeting 8
RAN1	Define design targets, identify candidate solutions 2 TU	Work on design targets 2 TU	Work on design targets 2 TU	Complete design 2 TU				
RAN2 (MAC and RRC)	0	0	1 TU	1 TU	1.5 TU	1.5 TU		
RAN4 Core	0	Feasibility of candidate solutions RD: 0.25 RF: 0.25	Feasibility of candidate solutions RD: 0.25 RF: 0.25	Work on core requirements RD: 0.25 RF: 0.25	Work on core requirements RD: 0. 5 RF: 0.5	Work on core requirements RD: 0.5 RF: 0.5		
RAN4 Perf.	0	0	0	0	RD: 0.25 RF: 0.25	RD: 0.25 RF: 0.25	RD: 0.5 RF: 0.5	RD: 0.5 RF: 0.5

Thank you !