C1-161633:
eCall overview and status

QUALCOMM®

28 March 2016

History of eCall for the EU

- 1999: Inception in the European Commission (EC) to improve road safety via automated emergency calls (eCall) from vehicles following an accident or other emergency situation
- 2004-2006: eSafety Forum composed of SDOs, auto industry, MNOs and public safety, identifies high-level requirements and recommendations [Ref 1], [Ref 2], [Ref 3]
- 2006: GSM Europe completes a study of possible solutions for transfer of a minimum set of data (MSD) from a vehicle to a PSAP during an eCall and recommends inband modem [Ref 4]
- 2006-2008: 3GPP evaluates in-band modem solutions for eCall and makes a selection [Ref 5]
- 2008-2009: inband modem solution and support for eCall only mode are standardized in 3GPP for GSM and UMTS in Rel-8 – e.g. in TSs 21.101 [Ref 6], 24.008 [Ref 7], 26.267 [Ref 8]
- 2011: 3GPP updates inband modem specifications based on results of field testing and trials
- 2015: Russia mandates deployment of EU inband modem solution (with ERA GLONASS)
- 2015: European Parliament mandates deployment of eCall in all new vehicles in the EU starting in 2018 [Ref 9]

NOTE: the current version of eCall in Rel-8 through Rel-13 supports CS but not PS/IMS access

Operation of eCall with Inband Modem

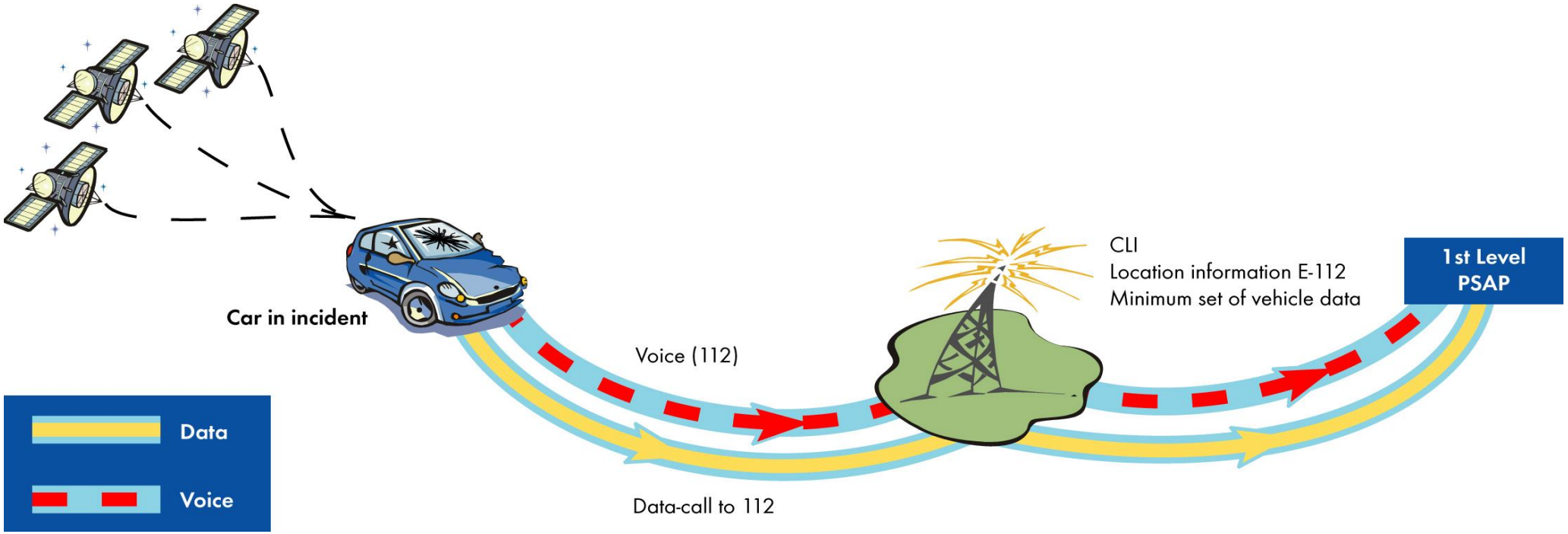

- The IVS instigates a 112 call (TS12) following an accident (sensor trigger) or user invocation
- The 112 call carries an automatic or manual eCall indication and can be routed by the VPLMN to an eCall capable PSAP (red)
- The PSAP and IVS use the inband modem to transfer the MSD over the voice path (yellow)
- MSD transfer interrupts voice communication for around 4-10 sec.s at the start of the eCall

Content and Format of MSD

- Defined by CEN [Ref 10] and limited to 140 octets maximum to reduce voice interruption
- Provides critical vehicle information to a PSAP including:
  - Vehicle type (e.g. passenger vehicle, bus/coach, heavy duty vehicle, motorcycle)
  - VIN
  - Fuel/Propulsion type (e.g. petrol, diesel, electric)
  - Location – lat/long
  - Vehicle direction and 1 or 2 previous locations
  - Estimated number of occupants
- Binary definition uses ASN.1 PER encoding and cannot exceed 140 octets
- An alternative XML definition is included which can exceed 140 octets – e.g. an example MSD encoded in XML in [Ref 11] uses exactly 1234 octets (not counting whitespace characters)
- The ASN.1 definition will be used for CS eCall in Rel-8 through Rel-13
- The XML definition is assumed for MSD transfer by the IETF eCall solution [Ref 11] and could be used for IMS eCall

Transfer of MSD from IVS to PSAP via serving PLMN

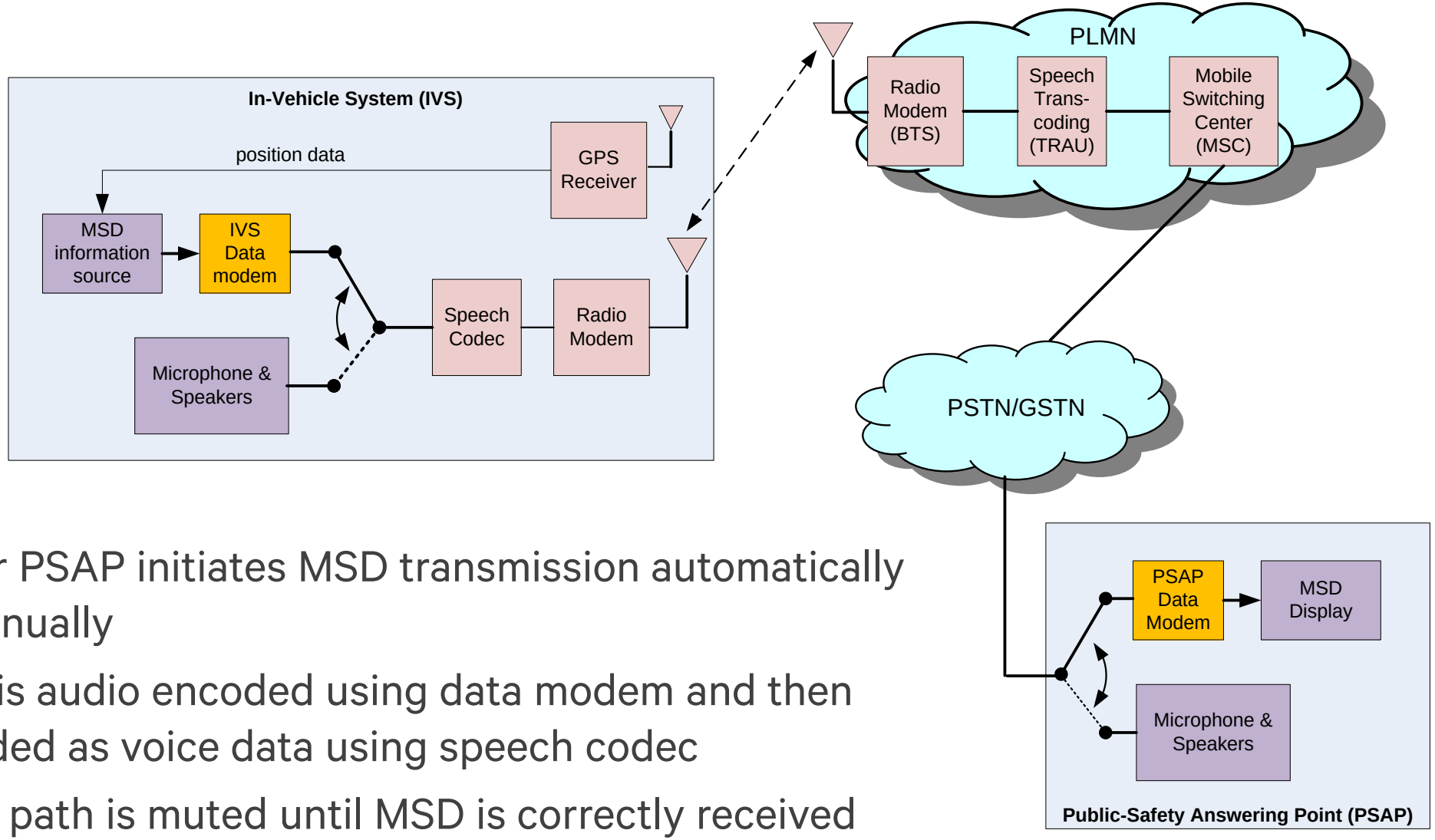

- IVS or PSAP initiates MSD transmission automatically or manually
- MSD is audio encoded using data modem and then encoded as voice data using speech codec
- Voice path is muted until MSD is correctly received

eCall Routing by Serving PLMN

- An eCall is established using existing procedures in 3GPP 24.008 [Ref 7] for a TS12 call
- The optional Service Category IE in the EMERGENCY SETUP message indicates an eCall:

Table 10.5.135d/3GPP TS 24.008: Service Category information element

Emergency Service Category Value (octet 3)
The meaning of the Emergency Category Value is derived from the following settings (see 3GPP TS 22.101 [8] clause 10):

Bit 1	Police
Bit 2	Ambulance
Bit 3	Fire Brigade
Bit 4	Marine Guard
Bit 5	Mountain Rescue
Bit 6	manually initiated eCall
Bit 7	automatically initiated eCall
Bit 8	is spare and set to "0"

Mobile station may set one or more bits to "1"
If more than one bit is set to "1", routing to a combined Emergency centre (e.g. ambulance and fire brigade in Japan) is required. If the MSC can not match the received service category to any of the emergency centres, it shall route the call to an operator defined default emergency centre.

If no bit is set to "1", the MSC shall route the Emergency call to an operator defined default emergency centre.
A mobile station initiating an eCall shall set either bit 6 or bit 7 to “1”. The network may use the information indicated in bit 6 and bit 7 to route the manually or automatically initiated eCall to an operator defined emergency call centre.

- The VMSC can use the service category IE to route towards an eCall capable PSAP
- The service category IE cannot be transferred to the PSAP though a PSAP may assume a UE is eCall capable if PLMN routing to the PSAP is only used for an eCall

eCall only Mode

- eCall only mode is defined in 3GPP 22.101 [Ref 6] to avoid network load for an IVS configured to support eCall only and not normal services
- Procedures were added in 3GPP 24.008 [Ref 7] including an eCALL INACTIVE UE substate
- An IVS refrains from mobility management procedures and all signaling with a VPLMN except to instigate (A) an eCall, (B) a test call or (C) a reconfiguration call to the HPLMN
- For a short period after A, B or C (default = 12 hours), an IVS continues mobility management procedures in order to allow a PSAP or HPLMN callback or HPLMN reconfiguration
  - Note that (C) may be a regular voice call to a PLMN operator to agree normal subscription for a user after which the HPLMN would reconfigure the USIM and modify the UE service profile in the HLR/HSS
- Following the short period after A, B or C, an IVS re-enters eCALL INACTIVE substate
- An IVS is required to include a USIM which can be configured with the eCall only mode indication and test and reconfiguration numbers
- eCall only mode has no PLMN impacts – e.g. all support in 3GPP 24.008 affects the IVS
- An IVS configured for eCall only mode will still have a minimal subscription with some HPLMN

History of IMS eCall for the EU

- 2012: instigated by the EC to provide a long term migration path for support of eCall with 4G
- 2013-2014: studied by ETSI who recommended a solution based on IMS as the successor to inband eCall [Ref 12]
- 2013-2016: developed by IETF Ecrit for use by 3GPP [Ref 11]
  - Current draft is in final stage of approval (awaiting IETF last call)
  - The solution is based on use of IMS and would convey MSD in the control plane as part of SIP signaling
  - The solution is extensible and can convey new types of data (e.g. new data related to a vehicle, vehicle cargo or passengers) and new control information (e.g. to enable a PSAP to remotely turn off a vehicle engine, honk a horn, flash headlights)
- 2015: stage 1 and stage 2 WIs approved by 3GPP as an addition to Release 14 for LTE access
  - The objective of the stage 2 WI [Ref 13] is stated as follows:
    - The objective of this work item is to specify the system impacts for an eCall based on IMS emergency calls that will allow for enhanced eCall user experience and functionality, and for the long-term phase out of CS core and access networks. The work will be based on service requirements defined by WI EIEI in SA1 and captured in TS 22.101.
- 2016: stage 3 WI approved by 3GPP for CT1 in March

Architecture for IMS eCall with an IP capable PSAP

- The signaling path rather than voice path can be used to transfer the MSD
- An alternative is MSD transfer via a data channel separate to the voice path

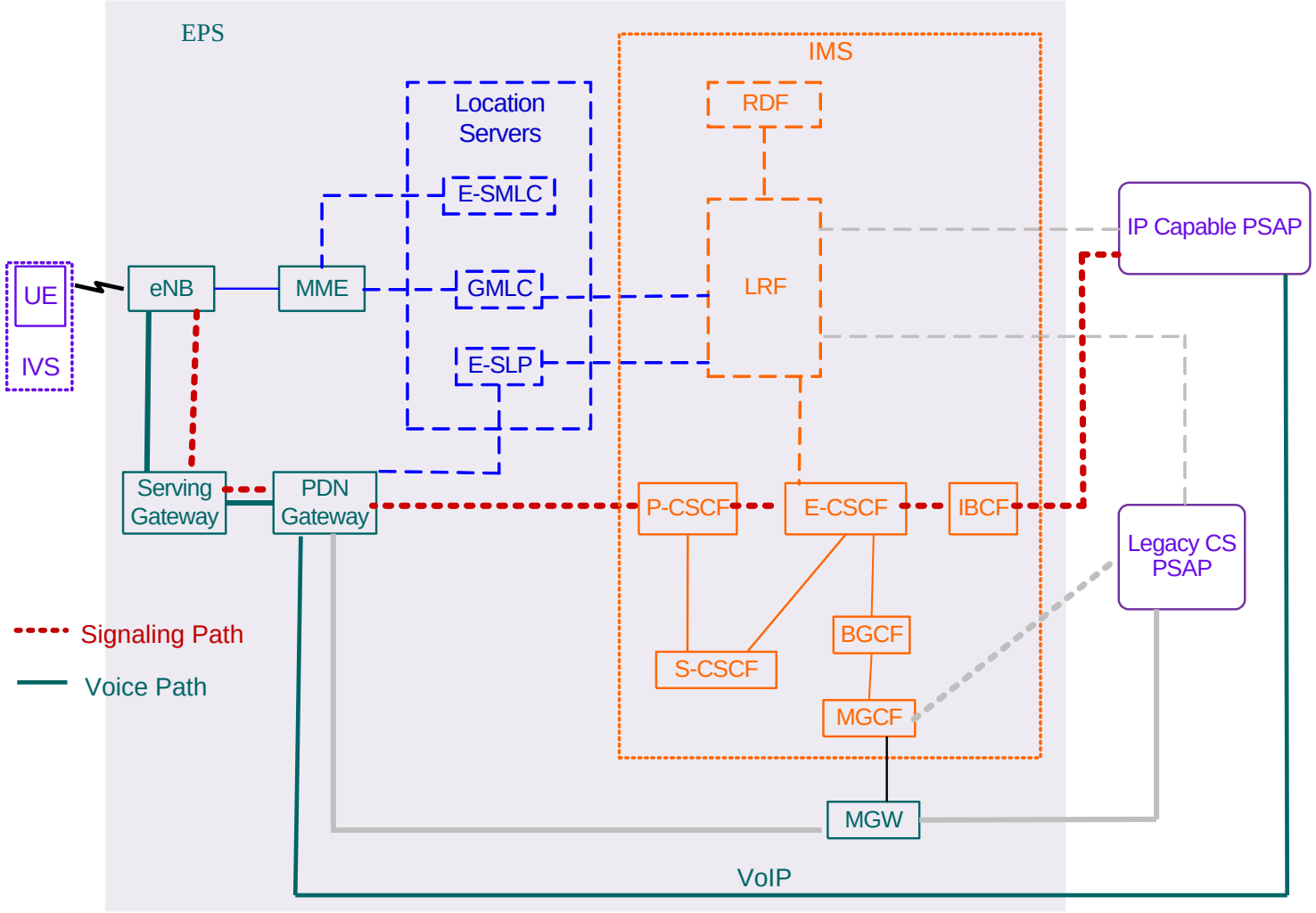

Architecture for IMS eCall with a legacy CS PSAP

- The MSD cannot be transferred using the signaling path or using a separate data channel
- The MSD is transferred over the voice path using the same data modem as for CS eCall in Rel-13
- The transcoding from VoIP to CS voice at the MGW can degrade inband MSD transfer reliability and increase delay and is a solution of last resort

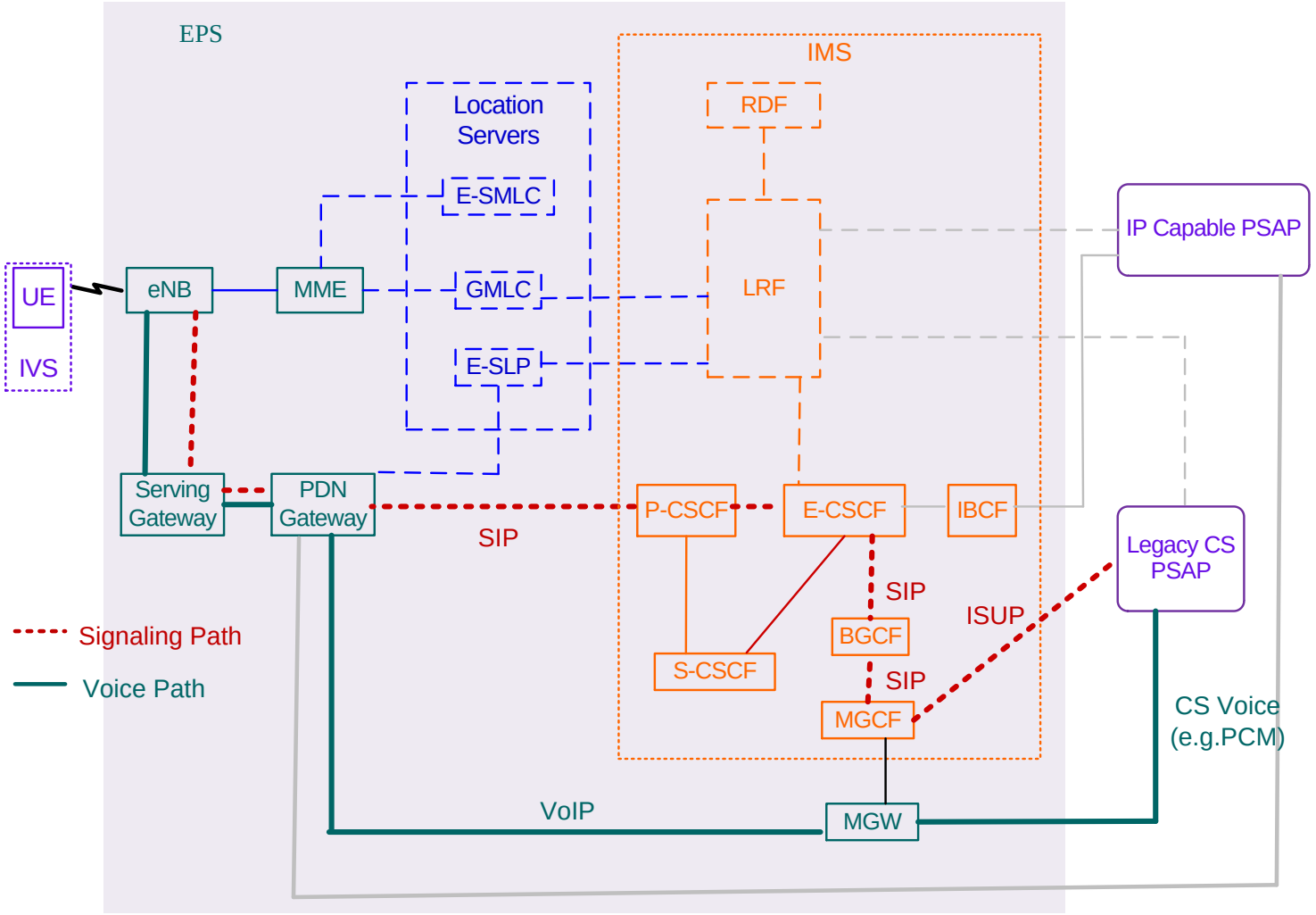

MSD Transfer and Interoperability

- With an IP capable PSAP, the MSD can be transferred along the signaling path using SIP messages (e.g. INVITE, SIP INFO, 200 OK)
- An alternative would be to use a separate data channel
- SA2 and/or CT1 will need to decide the preferred alternative and the MSD format (e.g. ASN.1 versus XML based on CEN [Ref 10])
- With a legacy CS capable PSAP, the MSD cannot be transferred along the signaling path or using a separate data channel (without additional impacts) due to restrictions on the CS side
- The PSAP and IVS then need to fall back to transfer along the voice path using the inband modem used for CS eCall
- An IVS can determine whether to fallback based on failure of IMS MSD transfer (e.g. no ACK)
- Fallback is a solution of last resort as the inband modem is not designed for voice path transfer using LTE with transcoding in an MGW, and performance can degrade
- This is a reason for continuing to use GSM and UMTS CS access (e.g. with CSFB) for eCall so long as PLMNs provide CS access and so long as PSAPs are not upgraded to IP support
- 3GPP 22.101 mandates support of CS eCall by any IVS that supports IMS eCall to enable a gradual transition from CS eCall to IMS eCall

Domain Selection

- 22.101 mandates that a UE that supports IMS eCall shall also support CS eCall
- Hence UEs supporting IMS eCall will need to perform domain selection
- A new AS flag (to be defined by RAN2) can indicate to a UE (IVS) whether IMS eCall can be used in a particular cell
- A PLMN can set the flag to indicate support if:
  - The PLMN supports IMS eCall ; and
  - PSAP(s) associated with (or usable for) the location for the cell is(are) IMS eCall capable
- Domain selection for eCall can then be performed similarly to domain selection for other IMS emergency calls by substituting the new AS flag for the current NAS indication of support for an IMS emergency call in Table H.1 in Annex H.5 of 3GPP 23.167
- Such domain selection would give preference to the PS domain whenever the flag is set for a serving (LTE) cell of a UE or for a (LTE) cell on which a UE is camped (e.g. for eCall only mode)

Support of Routing

- The IETF eCall draft [Ref 11] defines 2 new service URNs to identify an eCall to a VPLMN similarly to the Service Category IE for CS eCall:
  - urn:service:sos.ecall.automatic
  - urn:service:sos.ecall.manual
- These could be used (e.g. by an E-CSCF) to route to or towards an eCall capable (and possibly IP capable) PSAP
- The service URN can also be provided to a PSAP if IP capable, thereby allowing a PSAP to support both normal IMS emergency calls and IMS eCalls and to be able to distinguish one from the other

eCall Only Mode

- 3GPP 22.101 requires eCall only mode support for IMS eCall as well as CS eCall
- Support of eCall only mode can be similar to that for CS eCall
- This seems necessary to ensure that a dual mode IVS behaves in a consistent manner regardless of the access type
- 3GPP 23.401 can include a high level definition with more details (e.g. for a new eCALL INACTIVE substate) in 3GPP 24.301

Expected 3GPP impacts

- SA2
  - 23.401: support for eCall only mode; identify use of an AS broadcast indicator
  - 23.167: eCall impacts for UE, E-CSCF, MGCF; MSD transfer to IP PSAP; MSD transfer to legacy CS PSAP; domain selection (any difference to other IMS emergency calls)
- CT1
  - 24.301: stage 3 support for eCall only mode
  - 24.229: IMS signaling impacts for eCall; transfer of MSD to IP capable PSAP
- CT6
  - 31.102: USIM data (e.g. test/reconfiguration URIs)
- RAN2
  - 36.331: new AS indicator

NOTE: this list is not exhaustive

Abbreviations

CS	Circuit Switched
EC	European Commission
IVS	In-vehicle system
MNO	Mobile Network Operator
MSD	Minimum Set of Data
PS	Packet Switched
PSAP	Public-Safety Answering Point
SDO	Standards Development Organization

References - 1

- [Ref 1] eSafety Forum eCall Driving Group, “European Memorandum of Understanding for Realisation of Interoperable In-Vehicle eCall”, May 2004.
- [Ref 2] eSafety Forum, ”Clarification Paper – EG.2 , High level requirements for a eCall in-vehicle system, Supplier perspective”, March 2006, Version 1.0.
- [Ref 3] eSafety Forum, ”Recommendations of the DG eCall for the introduction of the pan-European eCall “, April 2006, Version 2.0
- [Ref 4] GSME, ”Options for eCall MSD signaling”, 21 April 2006.
- [Ref 5] 3GPP SP-080467, “3GPP Tdoc SP-080467 “TSG-SA WG4 (SA4) Status Report at TSG-SA#41”, SA#41, 15-18 September 2008.
- [Ref 6] 3GPP TS 22.101, “Service aspects; Service principles”.
- [Ref 7] 3GPP TS 24.008, “Mobile radio interface Layer 3 specification; Core network protocols; Stage 3”.
- [Ref 8] 3GPP TS 26.267, “eCall Data Transfer; In-band modem solution; General description”.

References - 2

- [Ref 9] Regulation (EU) 2015/758 of the European Parliament and of the Council of 29 April 2015.
- [Ref 10] CEN EN 15722, “Intelligent transport systems - ESafety - ECall minimum set of data”, April 2015
- [Ref 11] IETF draft-ietf-ecrit-ecall-07, Next-Generation Pan-European eCall, February 2016.
- [Ref 12] ETSI TR 103.140 V1.1.1 (2014-04), “Mobile Standards Group (MSG); eCall for VoIP”.
- [Ref 13] 3GPP SP-150623, Work item on “Evolution to and Interworking with eCall in IMS Stage 2”, December 2015.

Thank you

Follow us on:

For more information on Qualcomm, visit us at:
www.qualcomm.com & www.qualcomm.com/blog

© 2013 Qualcomm Incorporated. All rights reserved. Qualcomm, Snapdragon, and Gobi are trademarks of Qualcomm Incorporated, registered in the United States and other countries. Vuforia and Wireless Reach are trademarks of Qualcomm Incorporated. Atheros and Skifta are trademarks of Qualcomm Atheros, Inc., registered in the united States and other countries. Hy-Fi is a trademark of Qualcomm Atheros, Inc. Alljoyn is a trademark of Qualcomm Innovation Center, Inc., registered in the United States and other countries. Other products and brand names may be trademarks or registered trademarks of their respective owners.