3GPP TSG CT WG1 Meeting #84 **C1-133078**
Vienna (Austria), 5 - 9 August 2013

Source: **Motorola Solutions**
Title: **A summary of Public Safety-related 3GPP activities to date in Rel-12**
Agenda item: **15**
Document for: **Information**
Contact: **Val Oprescu (voprescu@motorolasolutions.com)**

Abstract: ***This purely informational document briefly covers the beginnings of the current involvement of 3GPP with Public Safety (PS) and shows the current status of the PS work in various working groups. Subsequently, <u>brief</u> technical presentations of Stage 1 and Stage 2 work performed to date for the PS items follow.***

Disclaimers

- This document is FYI only and presents only publically available information about past developments; the document does not make any proposals and is unrelated to any other document that might have been submitted by us or by any other parties in conjunction with this, or with other meetings.

- To the extent that opinions rather than mere facts have made their way in this document, or in its presentation or associated discussions, it is entirely inadvertent and they do not necessarily reflect the views of the contributor.

- This document has not been checked for accuracy or errors, and its content should not be cited or interpreted literally, but rather as a rough approximation of the presented information.

- When architectures are shown in this document, they did not originate with the contributor and the contributor does not have any opinion about them, in support, in opposition or otherwise.

Currently deployed ("narrowband") PS systems

- **P.25 (mostly North America) and TETRA (mostly outside North America)**
  - Similar systems, but not compatible to each other
- **General technical characteristics:**
  - Voice oriented, with some support of data
  - Large cells (in comparison to the commercial cellular system)
  - Group call and low latency PTT for mission critical support
  - Direct device-to-device communication
  - Priority/preemption and "red button" emergency connection to dispatcher
  - Some interconnectivity between deployed installations possible
- **Many times deployed as relatively small installations (no public operators, at least not in USA) operated by the customer-PS agency within its jurisdictional limits**

New proposed paradigm for broadband in USA

- On Jan 25, 2011, FCC decides that all 700 MHz public safety mobile broadband networks to use a common air interface, specifically Long Term Evolution (LTE).

- NPSTC Broadband WG looks at the Public Safety Mission Critical requirements and at the LTE capabilities and identifies lack of direct device to device communication as the main required, but missing capability in LTE.

- NIST decides to pursue an “unified” Public Safety and commercial LTE standard in 3GPP that would include direct device to device communications
  - Broadband in Public Safety is understood as LTE systems providing a small set of extra features necessary for Public Safety, rather than a specialized system
  - Belief that maximizing commonalty with commercial systems will lead to lowest cost for broadband pubic safety systems

- FirstNet (Public Safety operator in USA reporting into US Department of Commerce) gets formed and funded and gets assigned the spectrum in 700 MHz band (BC 14) that is allocated nationwide for Public Safety LTE.

How 3GPP got involved

- FirstNet brings proposals in 3GPP (namely SA) to update Rel-12 LTE with capabilities required by Public Safety, primarily direct device to device and group communications

- TETRA and Critical Communications Association (TCCA) came out in support of an unified worldwide public safety standard for broadband

- Initial reservations expressed by commercial operators are eventually overcome as at least social network applications are identified as potential revenue generators

- PS regulators from countries other than USA (e.g. UK Home office, Germany' s Federal Ministry of Economics and Technology (BMWI)) start participating

Public Safety related work in 3GPP to date (several study/work items)

- **Proximity Service (ProSE) = D2D = device-to-device**
  - Due for completion in Release 12; Rapporteur: Qualcomm
- **Group Call System Enablers (GCSE_LTE)**
  - Due for completion in Release 12; Rapporteur: NSN
- **REOPS (Resilient E-UTRAN Operation for Public Safety)**
  - Due for completion in Release 13; Rapporteur: General Dynamics Broadband
- **Conformance Testing for HPUE BC14/Region 2**
  - Due for completion by RAN5 working group in Dec 2013 (started and completed in Rel-11 in RAN4; Rel-11 leftover for RAN5) Rapporteur: Motorola Solutions

- ➢ Concern on work overload and how realistic the completion dates are
- ➢ SA will address the issue at the September plenary in Porto

Activities in 3GPP SA technical working groups

- **SA1 (Use cases and requirements):**
  - ProSe: SA1 SI (SP-110638) / WI (SP-130030); rapporteur Qualcomm
    - Specifications: TR 22.803 (Feasibility Study, new); update to TS 22.278 (Service Requirements); update to TS 22.115 (Charging & Billing) - all completed March 2013;
  - GCSE: SA1 & SA2 WI (SP-130158); rapporteur NSN
    - Specification: TS 22.468 (Stage 1 requirements, completed, June 2013)
- **SA2 (Architecture):**
  - ProSE: rapporteur Qualcomm
    - Specifications: TR 23.703 (key issues + complementary and alternative proposed solutions); work on TS has not started
  - GCSE: rapporteur NSN
    - Specifications: TR 23.768 (key issues + complementary and alternative proposed solutions); work on TS has not started
- **SA3 (Security) and SA3LI (legal intercept):**
  - SA3 LI exchanged liaisons with SA1, SA2 and SA3
  - ProSE: TR 33.cde (S3-130882); target completion March 2014
  - GCSE: TR 33.8xx (S3-130880); target completion June 2014

Activities in 3GPP RAN technical working groups

- **RAN1 (Radio interface physical layer):**
  - Status: SI (RP-122009) for Proximity Services with RAN1 as principal and RAN2-3-4 as secondaries; target completion date in RAN1: March 2014
  - Some agreements reached and documented in the meeting reports

- **RAN2 (Radio interface Layers 2/3) & RAN3 (eNodeB interfaces):**
  - Status: No work performed (or explicitly planned) on any Public Safety topics so far, due to work overload and incomplete dependencies from other groups

- **RAN4 (RF performance and compliance) & RAN5 (UE conformance)**
  - Status: BC14/Region 2 High Power UE work completed; conformance test work in RAN5 on track; some involvement possible for ProSE support down the line

Proximity Services (ProSe)

ProSe: Some basic requirements

- Capability is optional, but when available, is under user control, and subject to operator's policies and explicit authorizations
- Active network participation whenever the UEs are under network coverage
  - Only PS UEs are allowed to operate outside network coverage
- Multiple flows per UE are supported simultaneously, and they can be routed independently: some can be ProSe, others can be routed "normally" through the network.
- Seamless service continuity with QoS preservation may be required when switching in and out of proximity
- **Proximity services ≠ Direct device-to-device**
  - In fact, there are several options, direct device-to-device being just one of the options

“Default” (or “normal” i.e. w/o ProSe) data path configuration

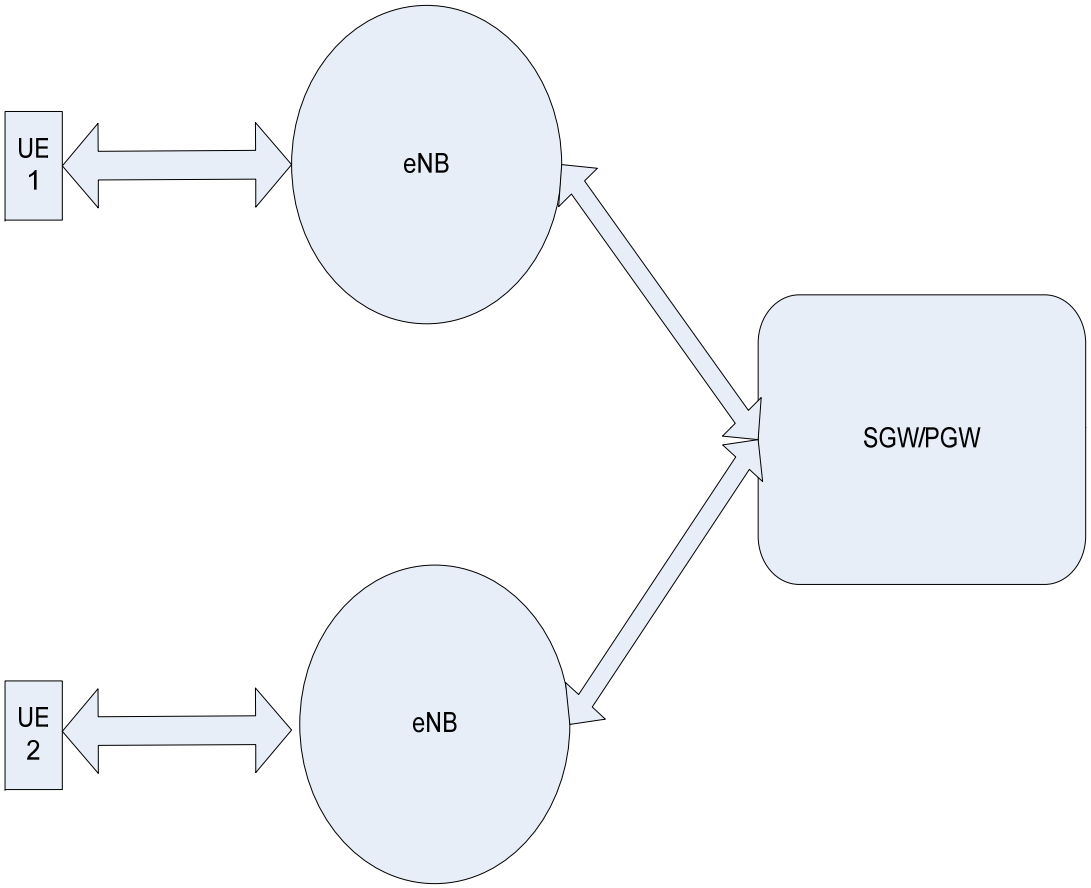

eNB = eNodeB, HeNB (?) , cell, or 3GPP relay node (TBD)

SGW/PGW = one or more interconnected gateways

data path = user plane

X2 link between eNBs is ignored

The configuration can be seen as:

- Not ProSe
- “Before” ProSe (Discovery may be occurring)
- “After” ProSe (service continuity as the UEs are drifting apart from each other after being in proximity)

“Locally-routed” data path configuration

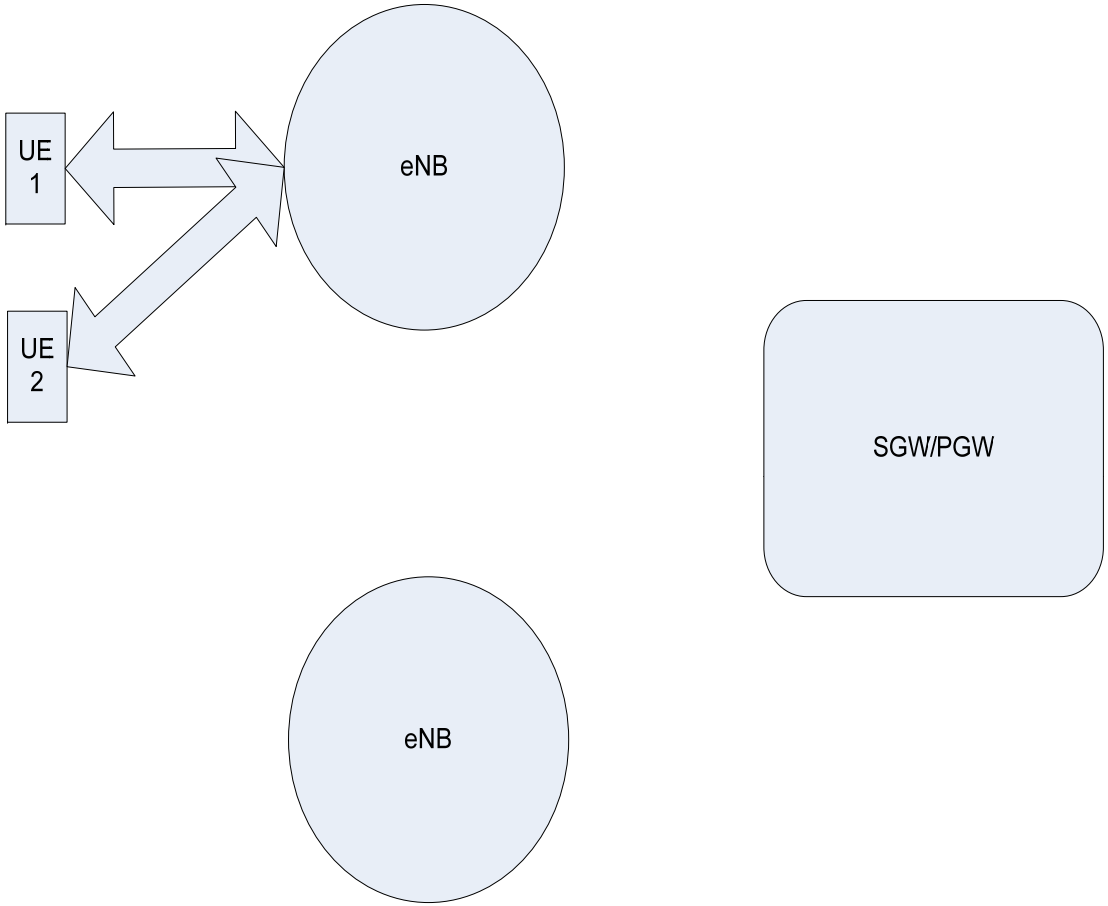

eNB = eNodeB, HeNB (?) , cell, or 3GPP relay node (TBD)

Proximity = served by same eNB, or some other configuration that is “less” than the normal (default) full routing through the network (see previous side).

The configuration can be used:

- For Commercial
- For Public Safety

“Direct” data path configuration

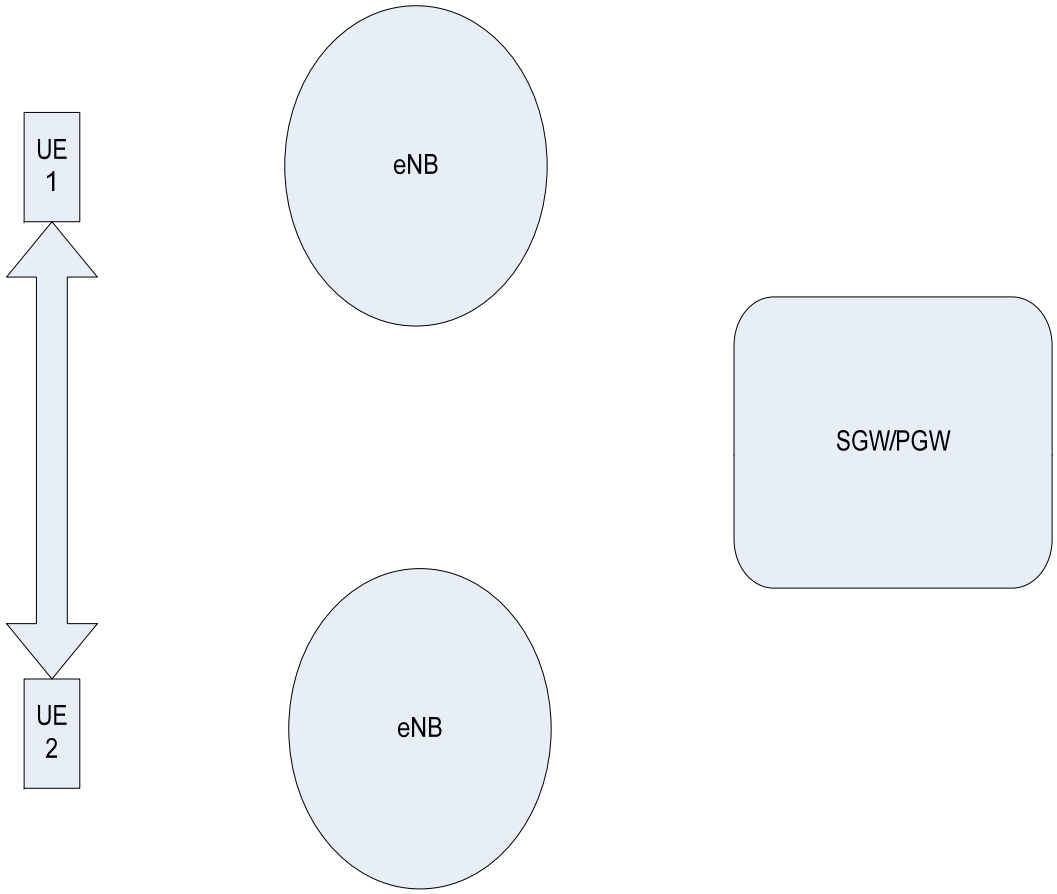

eNB = eNodeB, HeNB (?), cell, or 3GPP relay node (TBD); for Public safety, may be absent

The configuration can be used:

- For Commercial, using yet to be defined by RAN LTE direct mode (proposed for unloading traffic in case of congestion).
- For Commercial, using WLAN

  (No requirement to support transitions between LTE direct mode and WLAN).

- For Public Safety, using yet to be defined LTE direct mode

Two basic functionalities: ProSe Discovery and ProSe Communication

- In general, ProSe Discovery precedes in time ProSe communication, and ProSe Communication may be using information acquired during ProSe Discovery.

- However:
  - ProSe Discovery is not always followed by ProSe communication
  - Public Safety requires that ProSe Communication be possible without ProSe Discovery

- ProSe Communication between UEs is possible:
  - Via LTE unicast bearers to a common eNB
  - Via LTE direct device-to-device communication, to be defined by RAN
  - Via WLAN p2p direct device-to-device communication

Some ProSe Discovery features

- UEs can control independently being able to discover other UEs and being discoverable by other UEs
- Definitions: open discovery = by anyone interested; restricted discovery = only by certain allowed UEs
- A UE may transmit a ProSe UE Identity which can be an advertisement of its own identity or can be an inquiry for the presence of some other UE(s) of interest in proximity
- Consistent with the paradigms of social networking, gaming and directly downloadable Internet applications, it is possible to perform discovery of UEs based on the identity of the application running on the UE and on the identity of the user within that application.
- UEs may offer internal API for authorized appl. to use ProSe
- Discovery needs to be “as secure as other LTE operations”

Charging / Accounting:

- Operators may charge for:
  - Ability to be discovered
  - Ability to discover
  - Event of discovering a UE
  - Activation/deactivation of ProSe Communication feature
  - ProSe Communication actual initiation/termination
  - ProSe Communication duration and amount of data transferred
  - Differential based on proximity range class
  - Differential based on roaming

What's different for PS UEs vs. "commercial" UEs

- PS UEs must be able to support direct device-to-device ProSe discovery and communication when out of network coverage
- PS UEs must be able to start communication without performing discovery first
- Using a single transmission group call-like paradigm, PS UEs must be able to communicate with a well determined set of UEs in its proximity ("one-to-many") and with all RF-reachable UEs in its proximity ("one-to-all").
- Some PS UEs must be able to act as "UE-to-Network" relay and/or "UE-to-UE" relays for UEs in their proximity. Only single-hop relaying is required.
- Systematic "In-building penetration" of ProSe RF transmissions is expected
- The following are NOT requirements for Public Safety:
  - Permanent infrastructure coverage and direct, continuous operator control
  - WLAN support
  - Mandates, if they do not apply to PS: e.g. Lawful Intercept

ProSe Stage 2 work to date

- There are 38 proposals so far captured in SA2's TR 23.703, some very detailed (architectural drawings, procedural text, message flows, security requirements, etc.), some less so:
  - 11 proposals for ProSe Discovery
  - 6 proposals for ProSe Communication
  - 11 proposals for ProSe Relays
  - 5 proposals for ProSe Identifiers
  - 3 proposals on EPC support for WLAN Direct Communication
  - 2 proposals for ProSe Configuration
- So far, there are 6 identified key issues and 3 proposed solutions in SA3's TR 33.cde
- Some architectural drawings have been arbitrarily selected from 23.703, for illustrative purposes and are shown in the next few slides

“Generic” Architecture

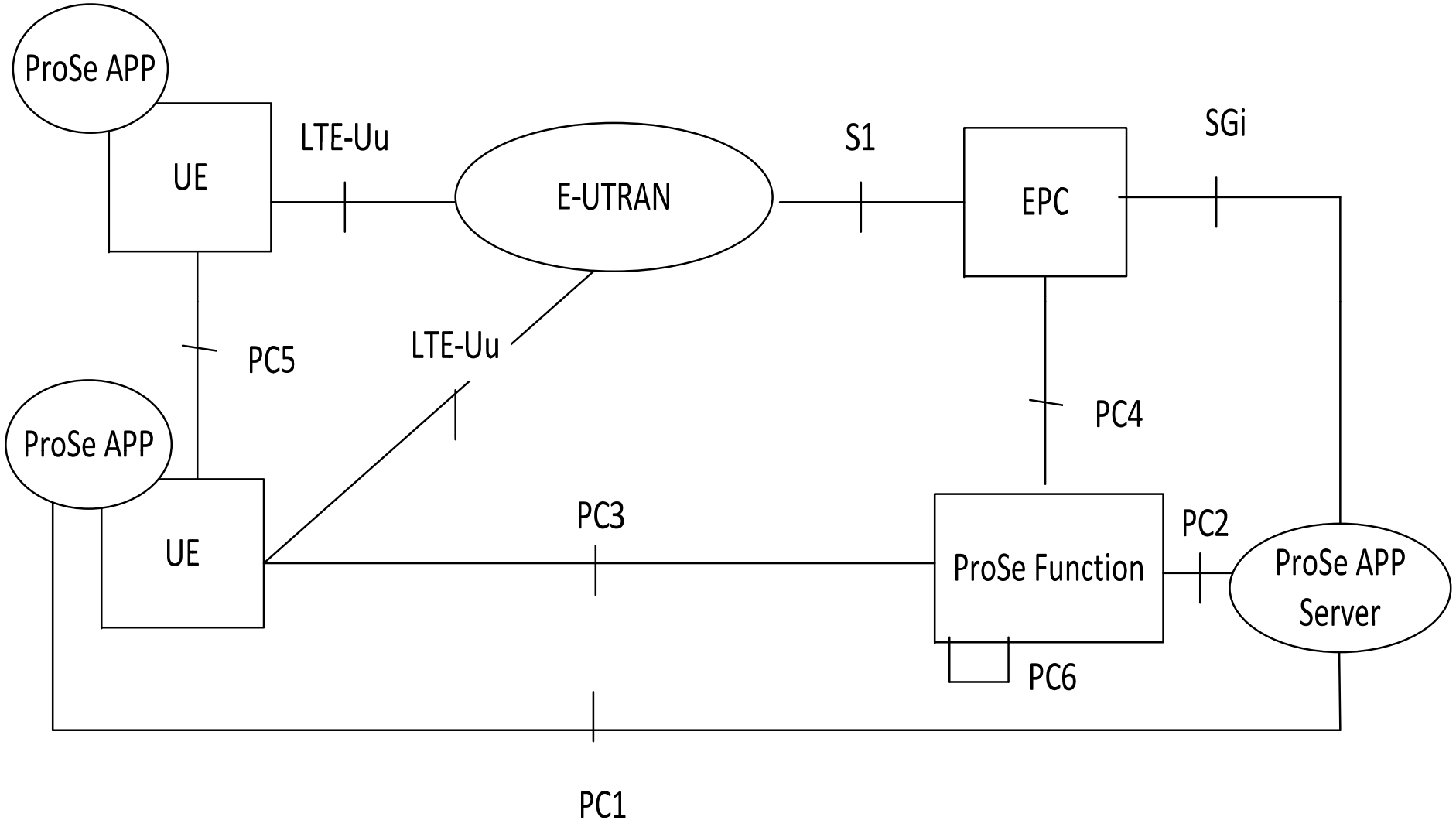

“Inside UE” view in support of ProSe Discovery

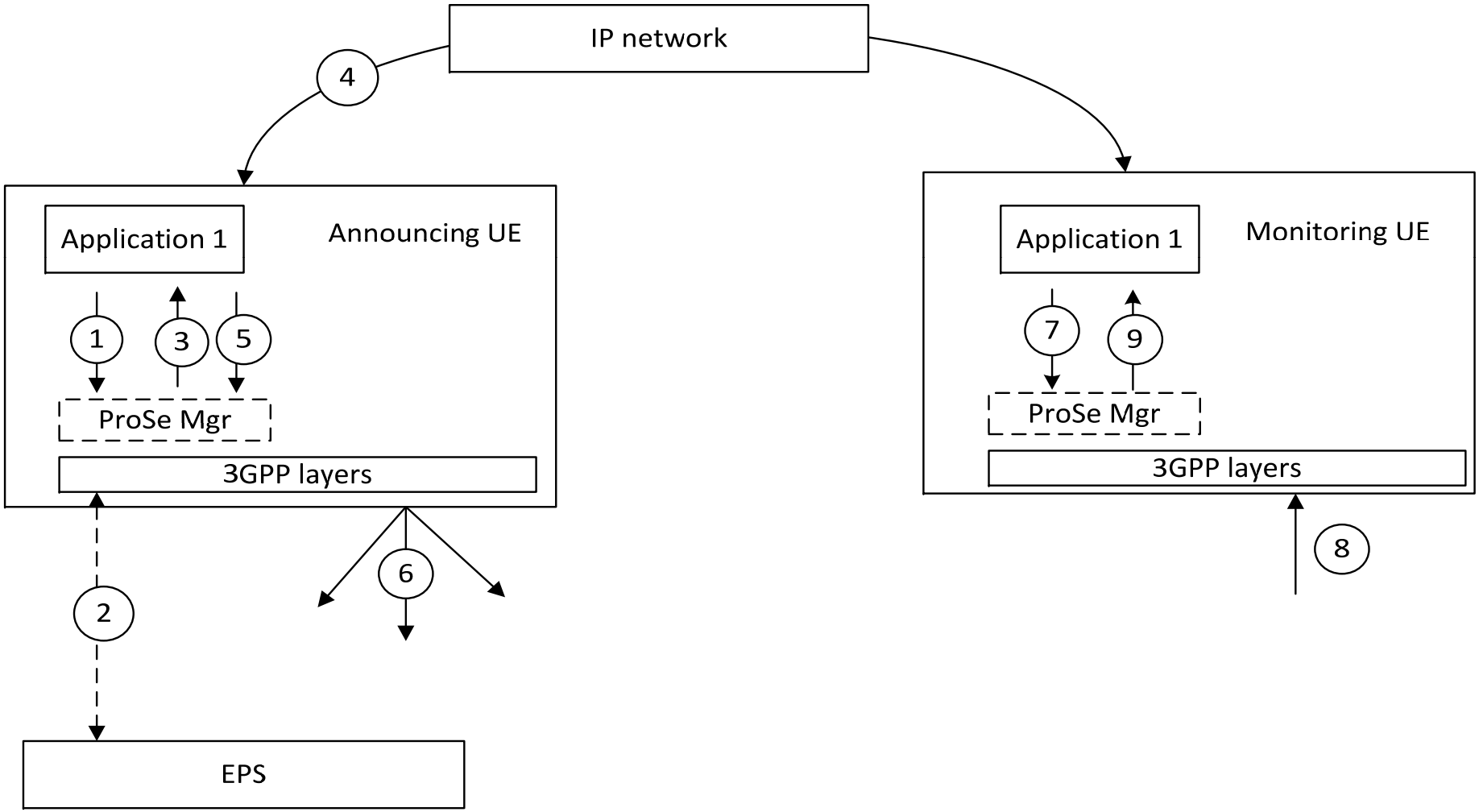

ProSe discovery using Presence

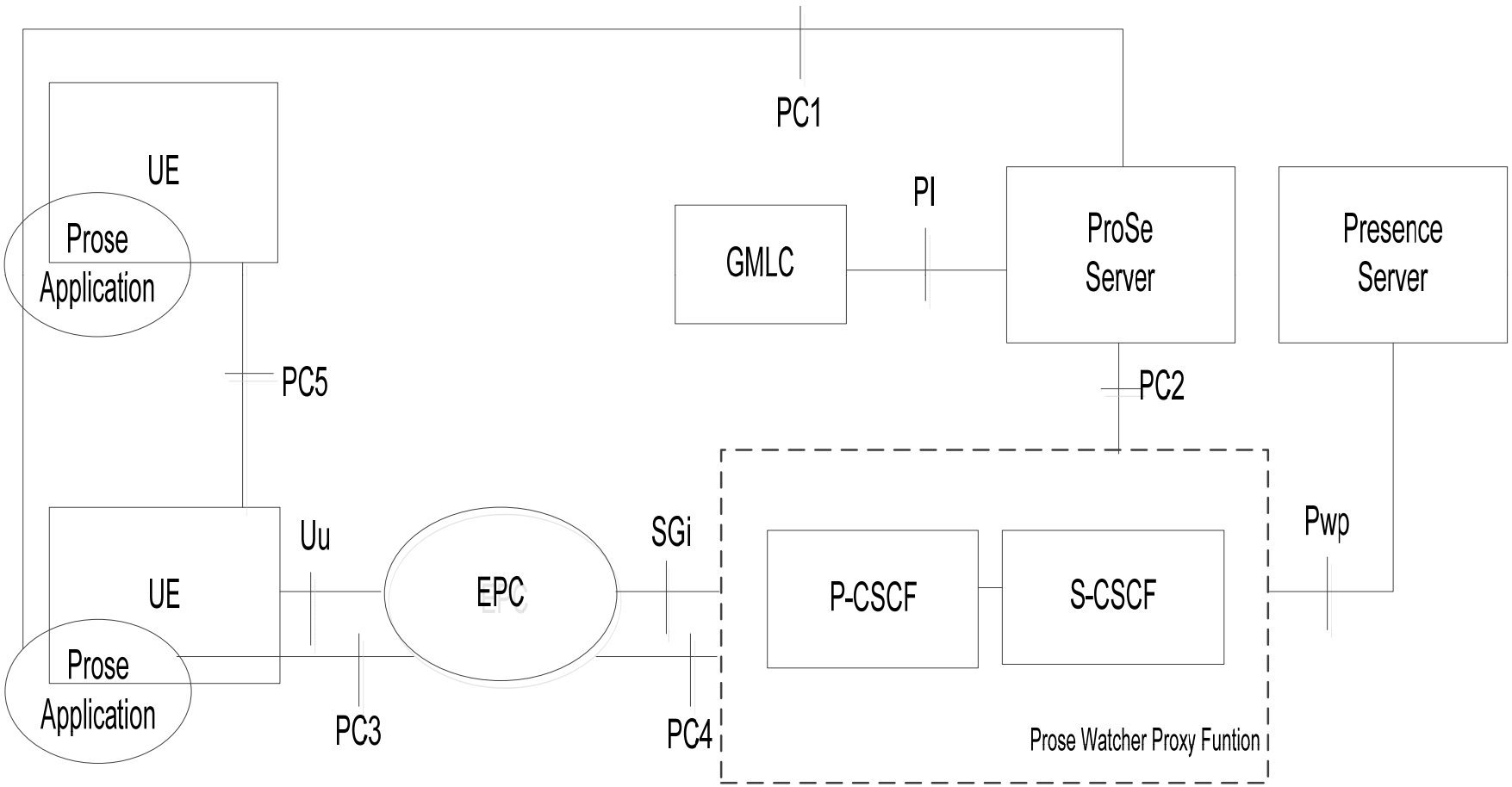

ProSe UE-to-Network Relay using Layer 3 routing

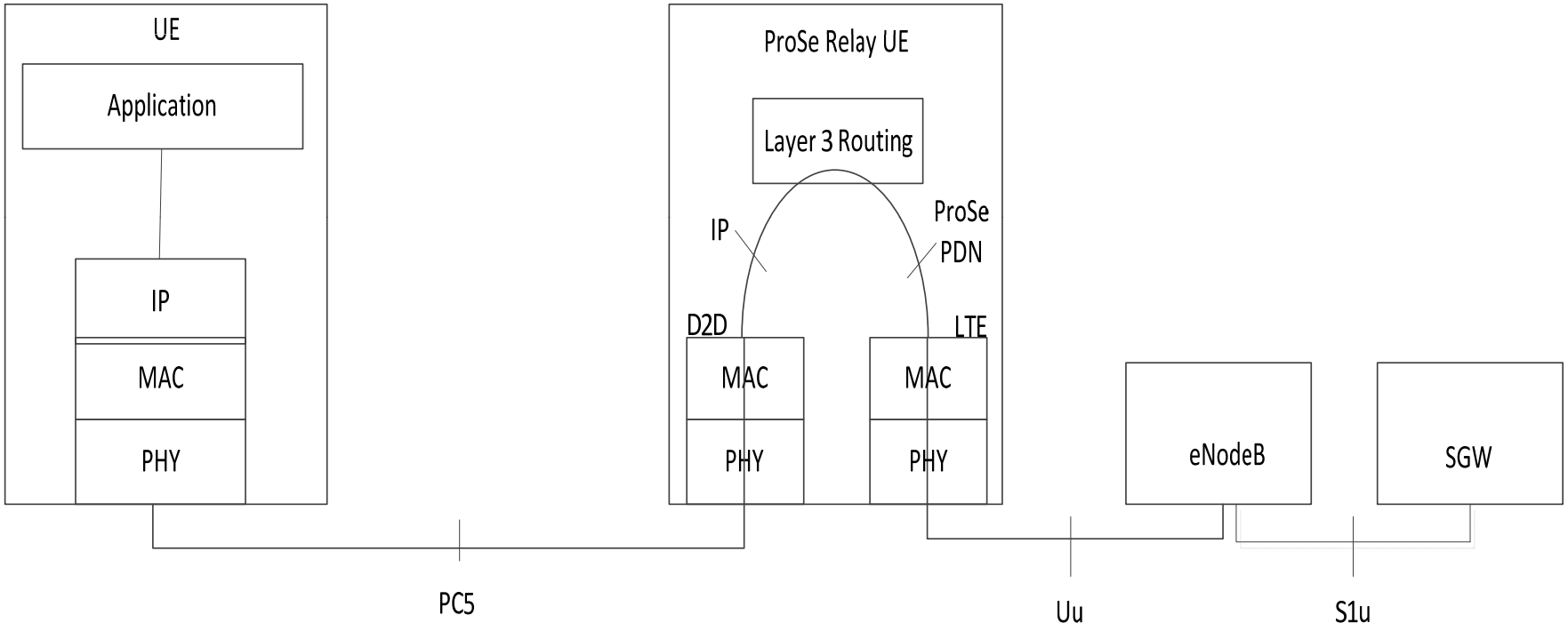

GCSE group communication using UE-to-Network ProSe Relay

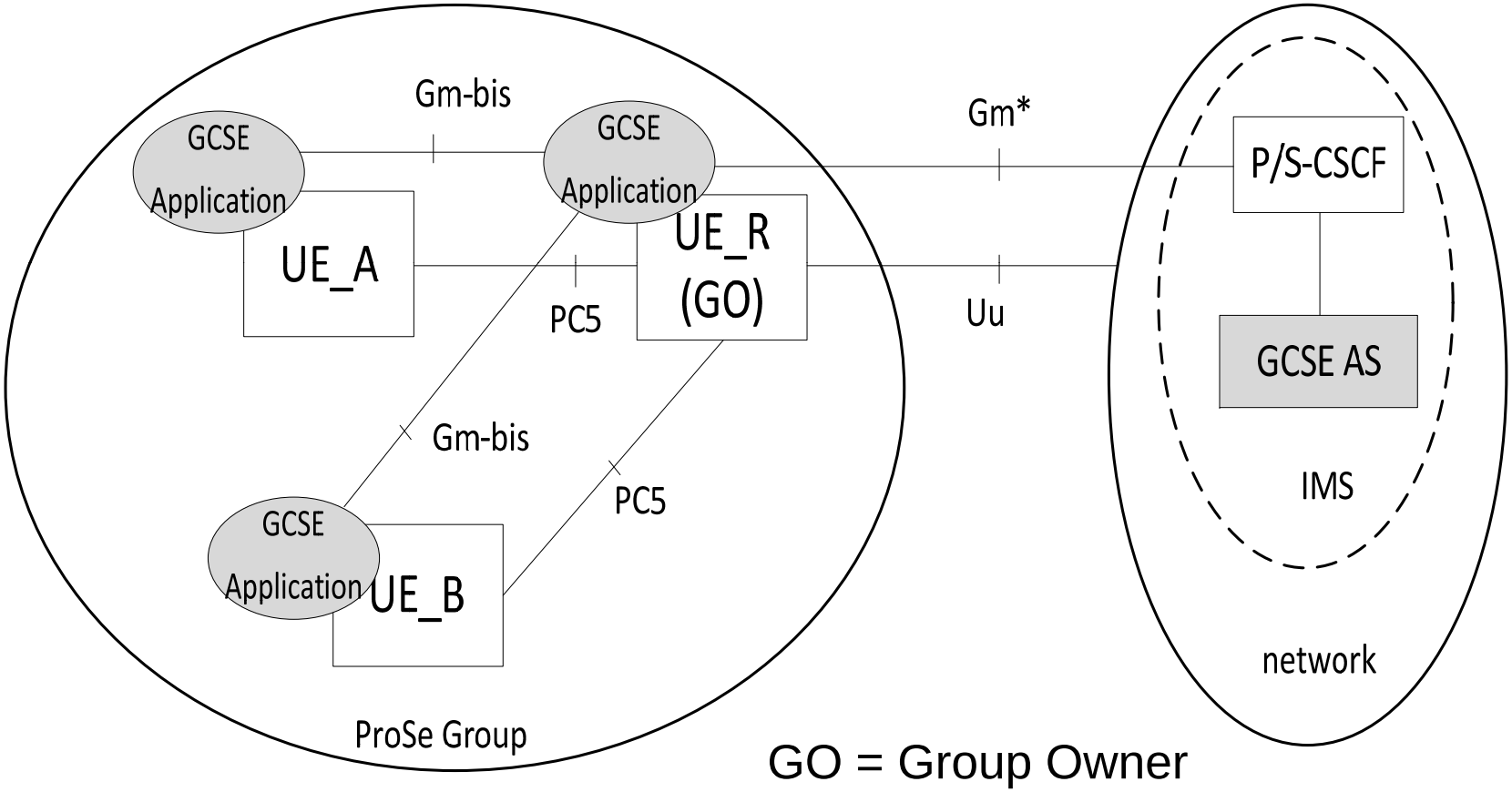

Reuse of Architecture proposal A1 from TR 36.806 for LTE Relays

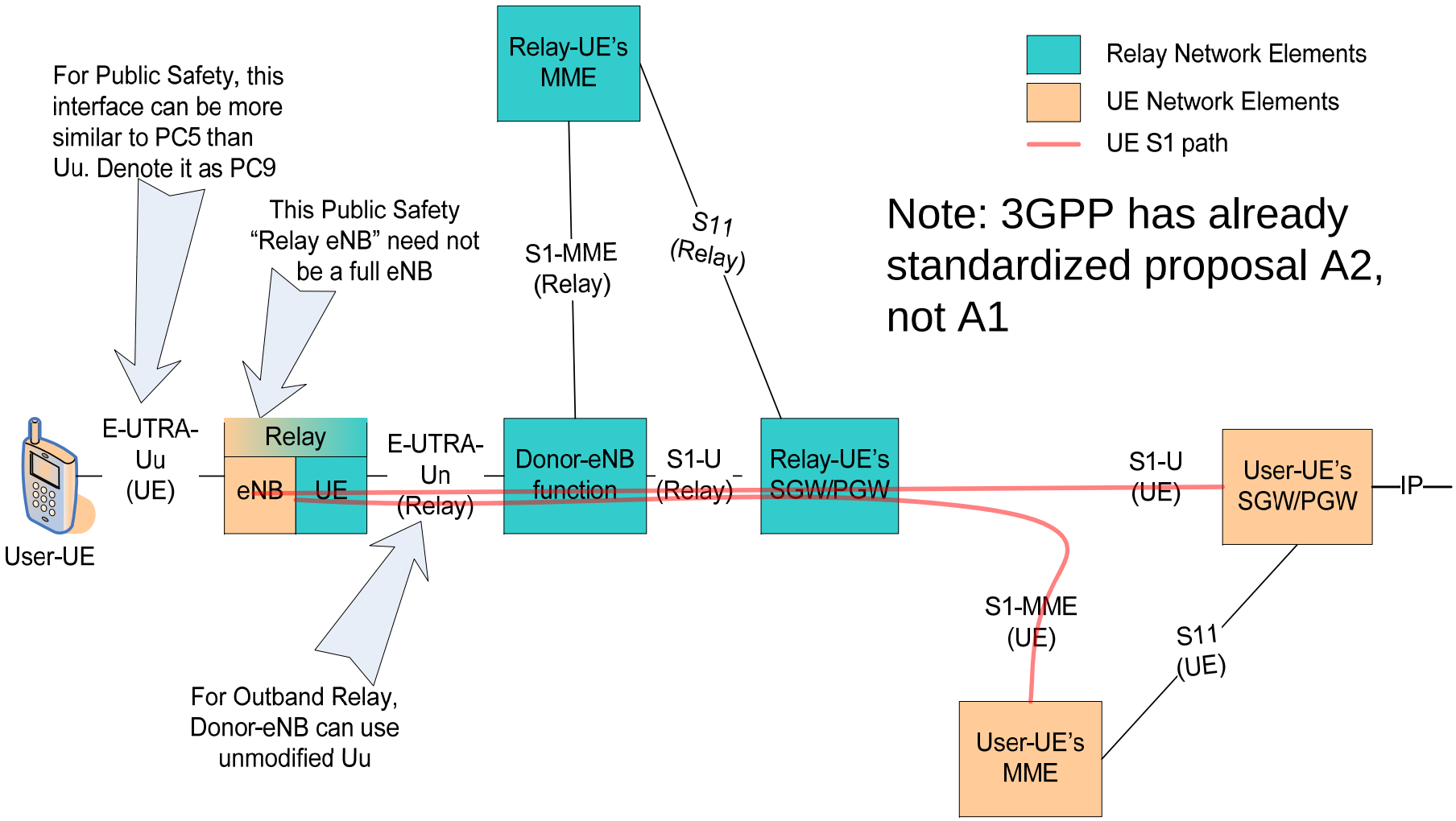

Group Communication System Enablers for LTE (GCSE_LTE)

GCSE definition

- Defined for “<u>any</u> media” and multimedia, which includes, but is not limited to PTT voice.

- Defined very broadly, trying to be inclusive of all main features present in TETRA, P.25, GSM-R

- The key architectural issue of how to map the functionality between an application layer (maybe belonging outside 3GPP) and a 3GPP-specific group communication layer (belonging in 3GPP) was NOT RESOLVED at Stage 1. Text in TS 22.468 reflects this non-decision and it was left to other groups to further define the scope of the capabilities.

GCSE Groups

- “Group” is viewed as an identifiable / addressable entity consisting of a well-specified set of users and additional operational information, with users including UEs, the dispatcher(s) and console(s), and any other identifiable and addressable entities able of receiving or transmitting (including other groups).
- Groups can be pre-configured or formed dynamically; any authorized user may define groups and/or add/delete users to/from them.
- Groups can be created, deleted, modified, have members added and/or deleted.
- Notifications of group-level and user-level events, including updated membership lists may be send to authorized requesting entities (e.g users).
- A set of operational attributes can be pre-established at group level for any group and then they apply to all communications of that group, unless overridden for an individual communication.
  - An example is “geographical scope”
  - For an individual communication, requested parameters must be consistent with the group’s default settings, or must have the ability to override the default parameters

GCSE: Group communications

- Group members may request setup, release and modification of characteristics for a specific communication, as well as notifications of such events and of when the communication starts.
- Group members may accept, reject or ignore a specific communication, unless explicitly forced to accept it.
- Floor control is supported, as applicable
- Support for priorities (for the communication and for users) and preemption is required.
- Support for simultaneous multiple flows (of same or different QoS) being transmitted by same or different UEs, except for possibly PTT voice when only one flow of this type is allowed.
- Support for security (at the same levels as for unicast) and requirement to collect accounting information for charging; requirement to provide ‘high availability”.
- Support for service continuity for mobile UEs
- Groups can have members accessing across PLMNs and across different RATs (e.g. P.25, TETRA); in the latter case, standardization work may end up being done outside 3GPP
- Simultaneous delivery of traffic, according to user perception
- Use cases show (group) calls rejected (but not queued) on (non-preemptible) busy and queued (but not rejected) when resources are not available
- Support of groups with all or some of the members outside areas of network coverage using ProSe relays

GCSE: Performance recommendations

- Based primarily on TETRA performance numbers
- Number of receiver group members in an incident handling area: at least 2000, potentially unlimited
- Number of active users per group, per incident handling area: at least 500
- Number of PTT voice groups in an incident handling area: at least 36
- PTT voice (mission critical) call setup time (understood as measured at the transmitter, from the time of depressing the PTT key, to receiving TPT): 300ms or less
- User plane delay: 150ms or less

GCSE Proposed Reference Architecture (TR 23.768)

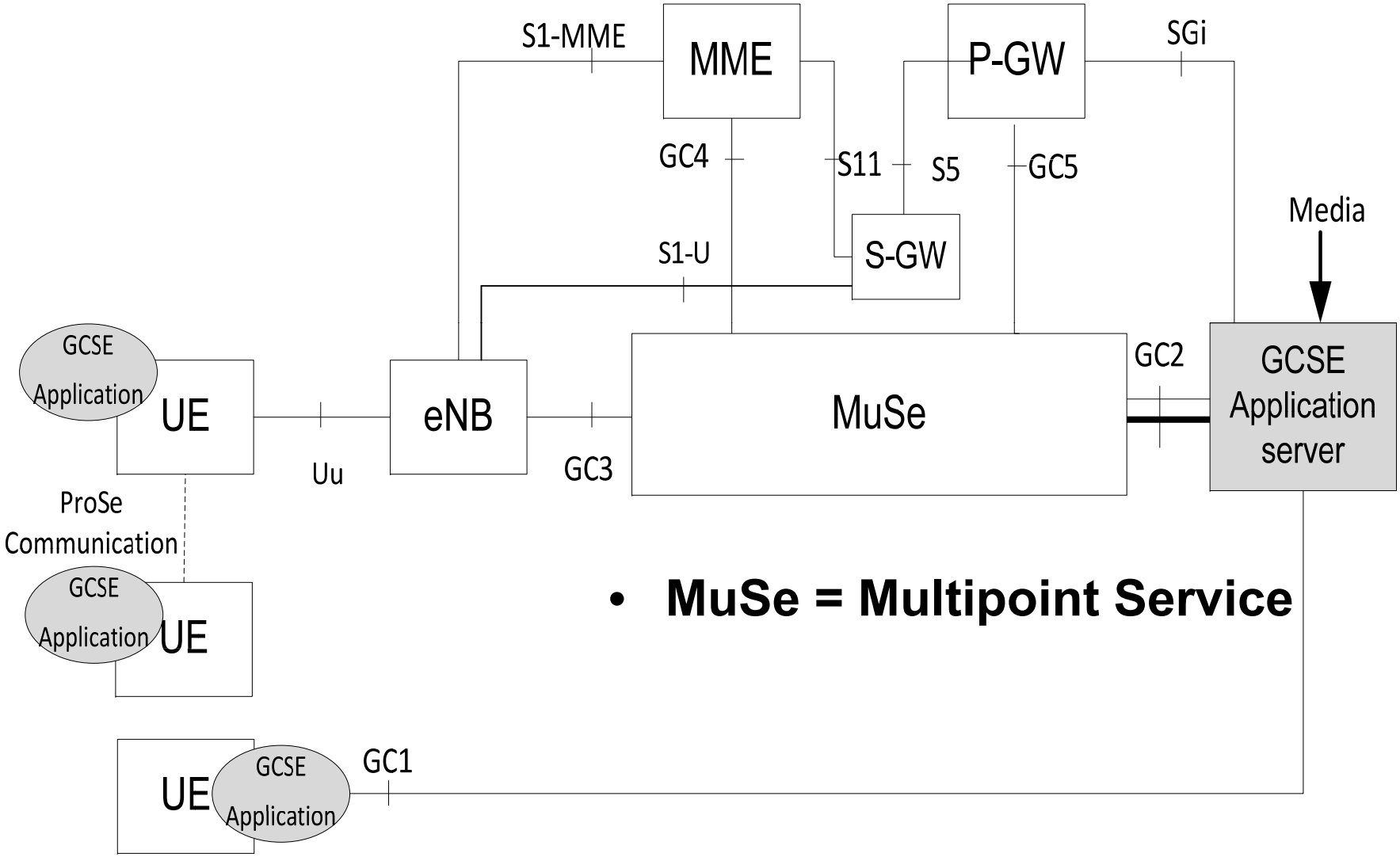

- **MuSe = Multipoint Service**

… and an arbitrarily selected proposed architecture showing mapping to eMBMS/LTE

GCSE server may be co-located with BM-SC

GCSE server may communicate with BM-SC directly (i.e. w or w/o PCRF)

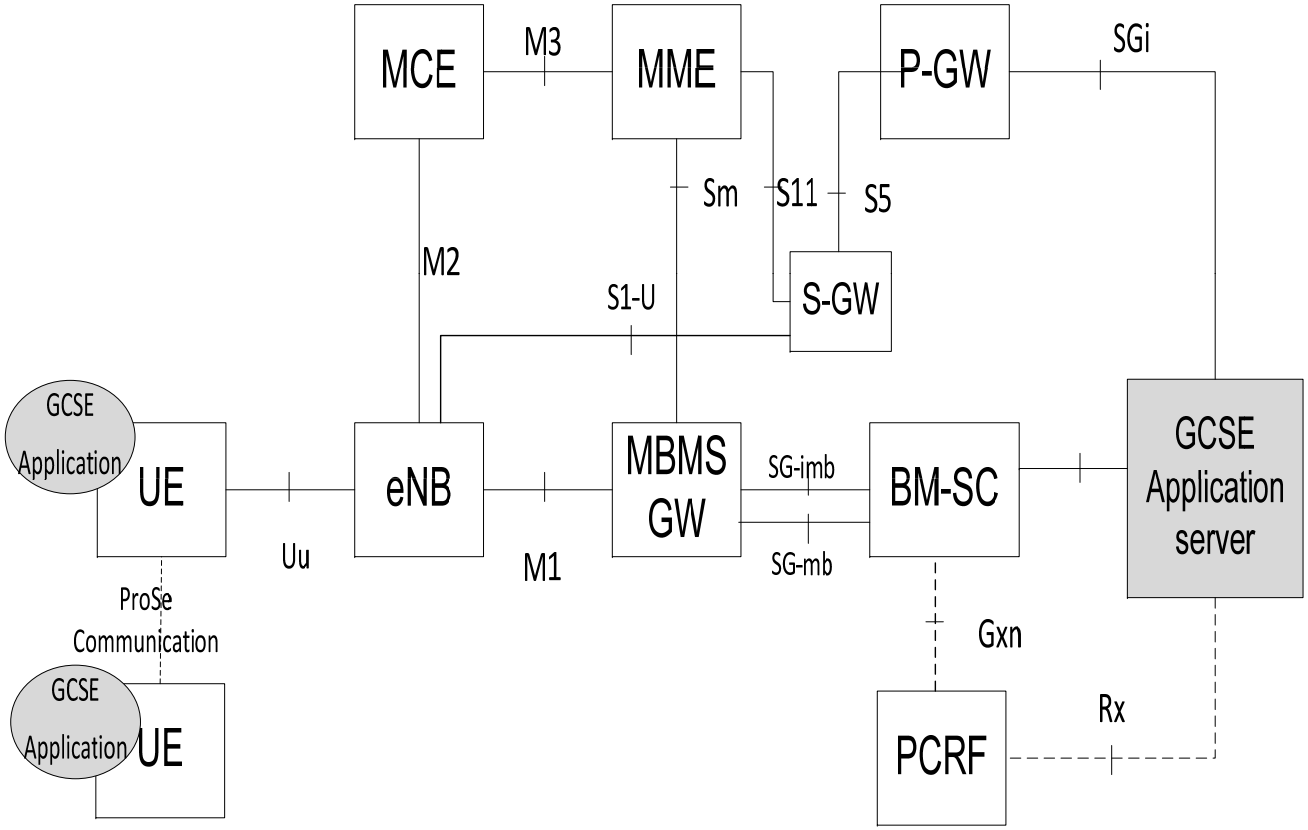

…and an arbitrarily selected IMS-based proposed GCSE architecture with eMBMS

eMBMS optional

Use of IMS Conference TS 24.147 via the Ut interface

Use SIP for call initiation

MRFP = Multimedia Resource Function Processor

MRFC = Multimedia Resource Function Controller (see RFC 4353)

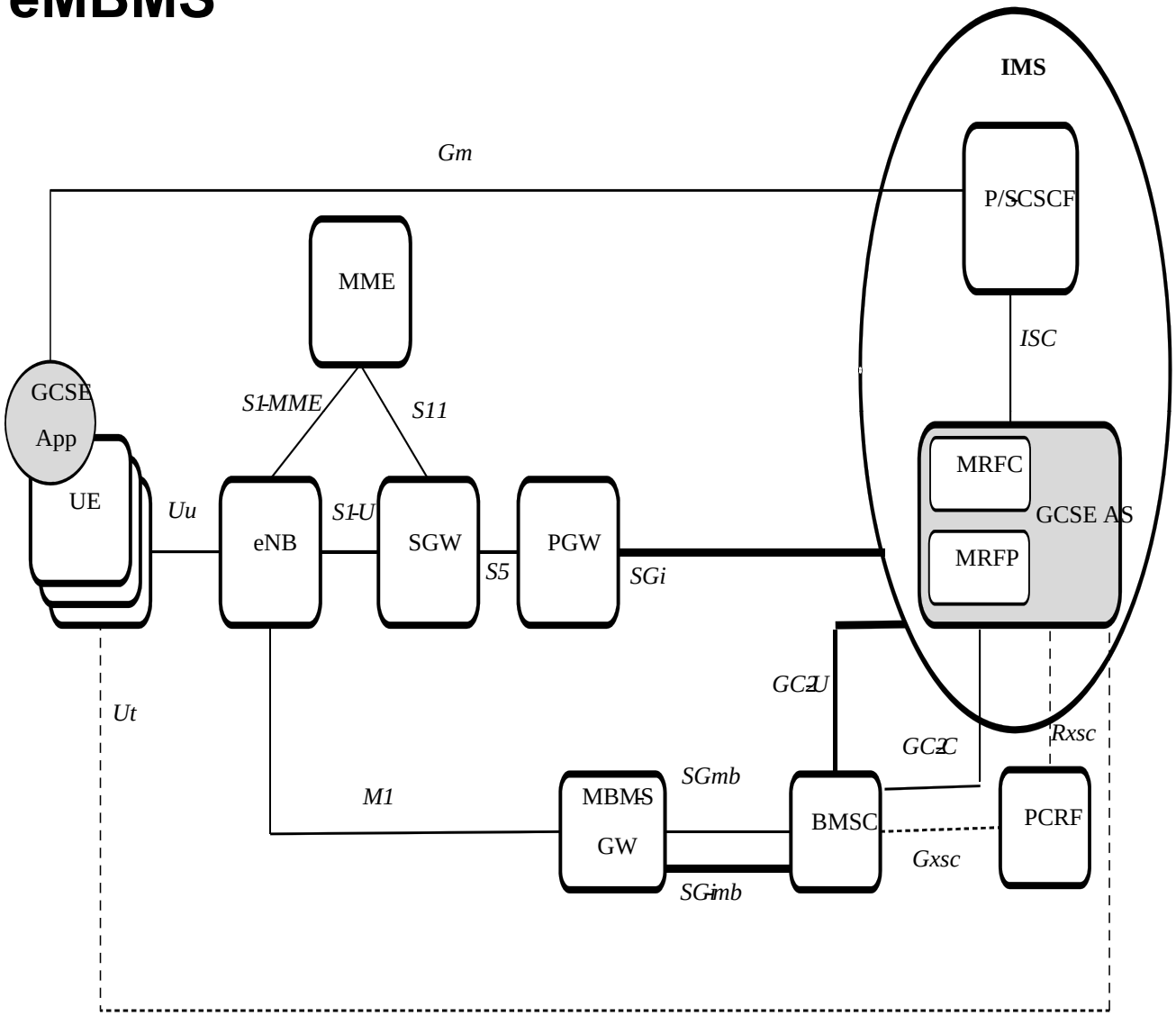

Agreed or currently moving towards agreement

- Mixture of unicast (ptp) and eMBMS (ptm) bearers in downlink for data distribution, in case eMBMS is used
- Unicast UL for sourcing data
- Ultimate control of deploying ptp or ptm bearers in each individual cell will be in GCSE AS, but RAN may assist with counting interested users in the cell.
- Pre-established eMBMS bearers, to avoid the high latency bearer setup
- For mission critical voice (i.e. call setup time < 300 ms) keep all the UEs in RRC connected mode with their bearers permanently allocated
- SIP to be used for UE registration and subscriptions and notifications with GCSE AS

Interactions between GCSE and ProSe

- Some ProSe Discovery proposals allow for discovery of group members of a given GCSE group, in proximity

- ProSE was developed before GCSE and has concepts similar to group call (referred to as: ProSE Group Communication or “one-to-many” and ProSE Broadcast Communication or “one-to-all”)
  - Based on current proposals, a ProSe “group communication” does not seem directly related to a GCSE group communication

- ProSE requirements describe a mechanism called “UE-to-Network relay” that may be a potential solution for GCSE groups with *some* members outside network coverage.

FS_REOPS: Resilient E-UTRAN Operation for Public Safety

FS_REOPS (Resilient E-UTRAN Operation for Public Safety)

- **Study item approved at the June 3GPP SA plenary. See SP-130204, SP-130240 and S1-133305**
- **Initial work (requirements) in SA1, followed by anticipated work in SA2, and eventually other working groups. Target completion date: June 2014 (Rel 13)**
- **Configurations:**
  - Single eNB (initially isolated or becoming isolated): e.g. eNB “on wheels”
  - Set of eNBs (directly connected or not) initially isolated or becoming isolated from backhaul
  - Set of connected eNBs initially isolated from backhaul becoming isolated from one another
- **Study to include interactions with ProSE and GCSE**
- **Rapporteur: General Dynamics Broadband**