3GPP TSG RAN #83
18-22 March 2019
Shenzhen, China

RP-190526

Some Observations on NR Positioning Architecture

NR Positioning Architecture (TS 38.305)

- LMF is the positioning "anchor"
  - Has complete knowledge of all positioning sessions and network topology
  - Terminates NRPPa toward the NG-RAN node
  - NRPPa is routed by the AMF and transported over NLs and NG-C

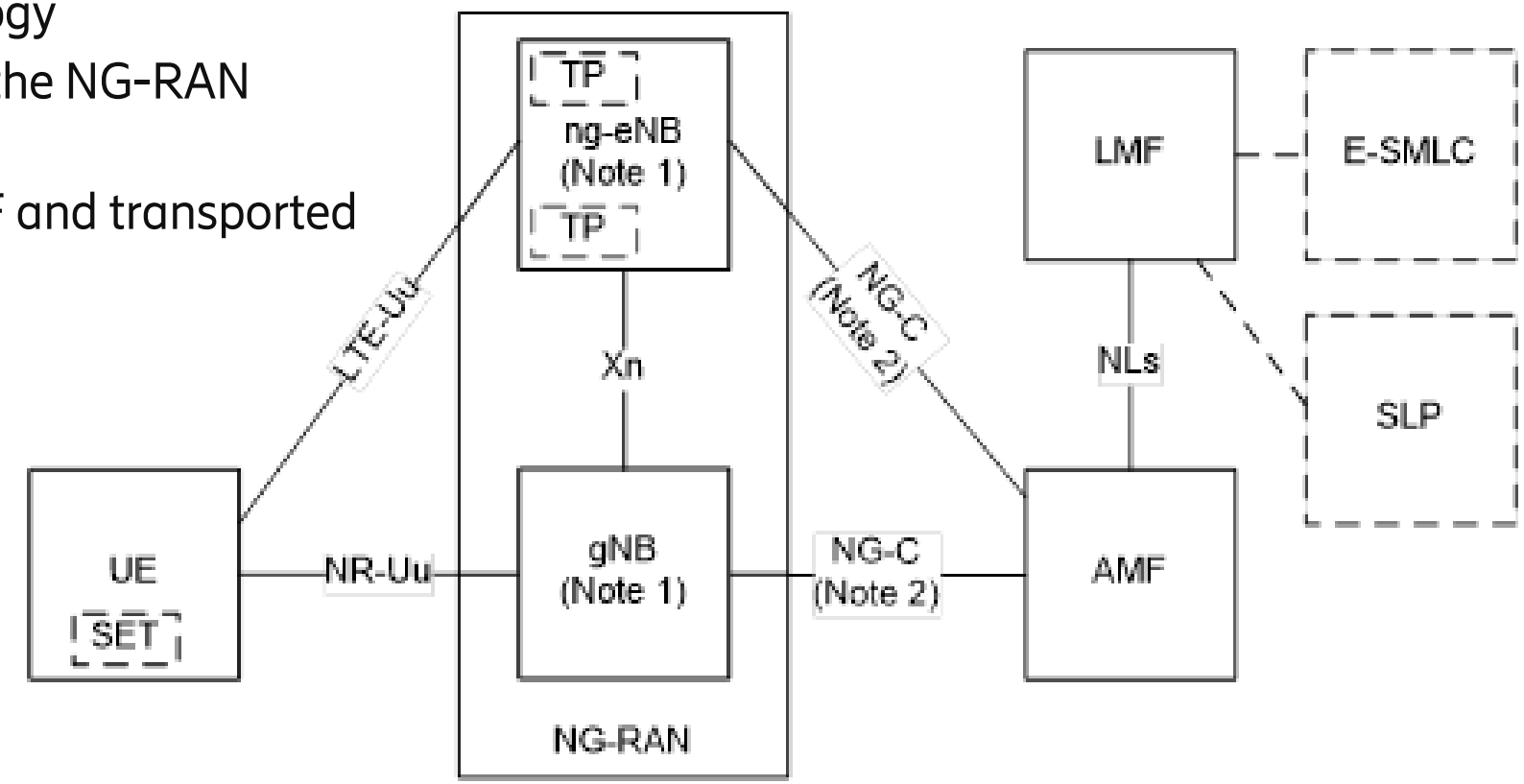

E-UTRAN Positioning Architecture (TS 36.305)

- E-SMLC is the positioning "anchor"
  - Has complete knowledge of all positioning sessions and network topology
  - Terminates LPPa toward the eNB
  - LPPa is routed by the MME and transported over SLs and S1
  - The LMU has a direct interface (SLm) toward the E-SMLC

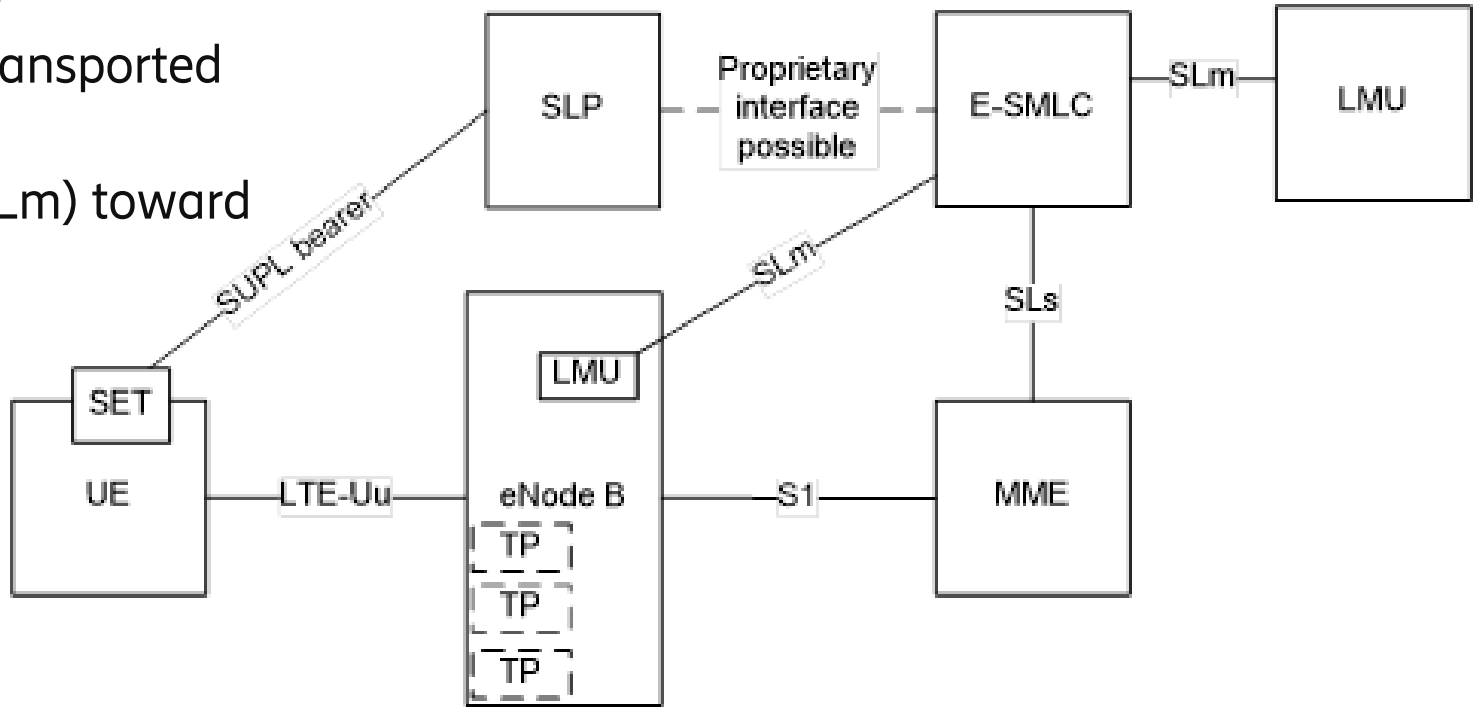

NR Positioning SI in RAN3 – Conclusions (TR 38.855)

- Architecture:
  - "Regarding NR positioning methods, the location of the transmission measurement function for disaggregated architecture (CU-DU) should be further considered.
  - "Regarding location management functionality in NG-RAN, no common understanding could be reached on any recommendation.
  - "Regarding NG-RAN acting as LCS client, RAN3 needs more justification in term of scenarios and foresees also further consideration on the authorization and privacy aspects."
- No "answer"; many questions remain open

LMF in RAN (sols. 26 and 28, TR 23.731)

- Distributed deployment of LMF functionality in NG-RAN, subject to AMF selection based on:
  - LMF registration (sol. 26)
  - AMF pre-configuration or NGAP signaling (sol. 28)

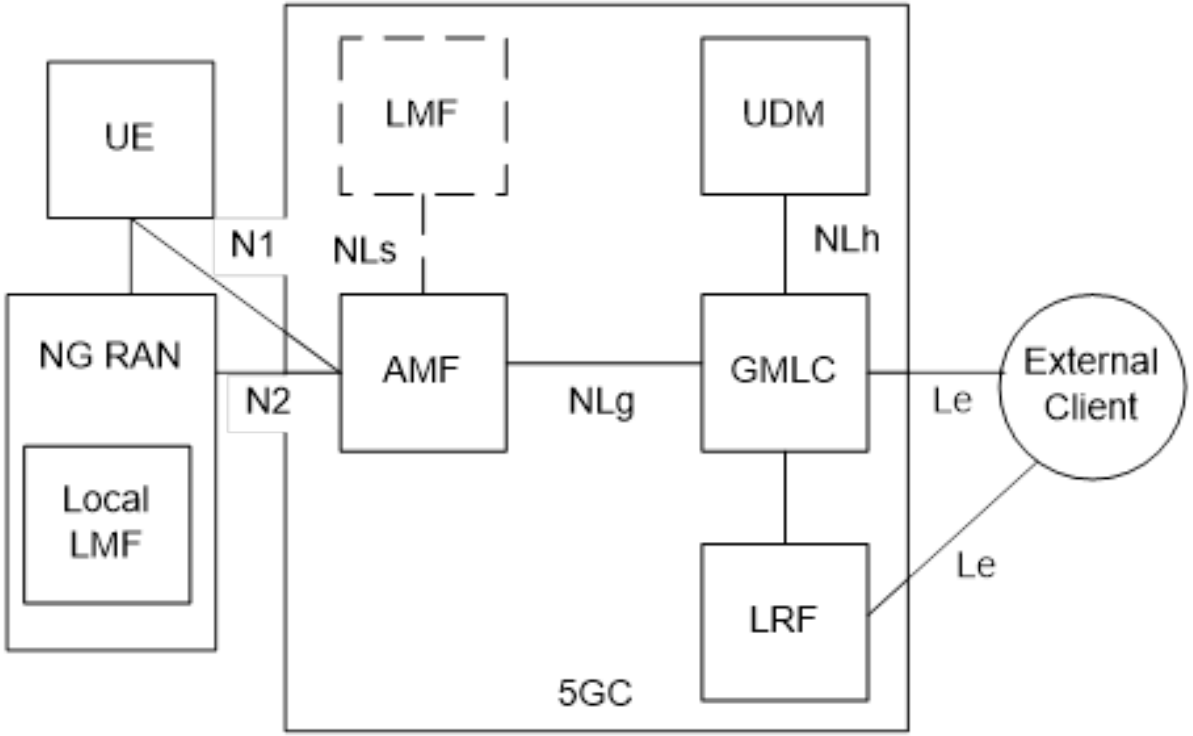

LMF in RAN – Significant RAN impacts

- AMF needs to know the serving node for the UE (i.e. it always needs to page it) before the positioning session can start
  - "Containers" for NLs need to be added to NGAP
- If a local LMF is to be allowed to have positioning sessions also for UEs not served by its co-located NG-RAN node, inter-LMF coordination is needed
  - E.g. Transfer of measurement context: additional Xn impact
  - Need to avoid multiple LMFs requesting contradictory/incompatible measurements for the same UE
- For the split architecture, the local LMF is likely to reside in the gNB-CU
- Unclear benefits

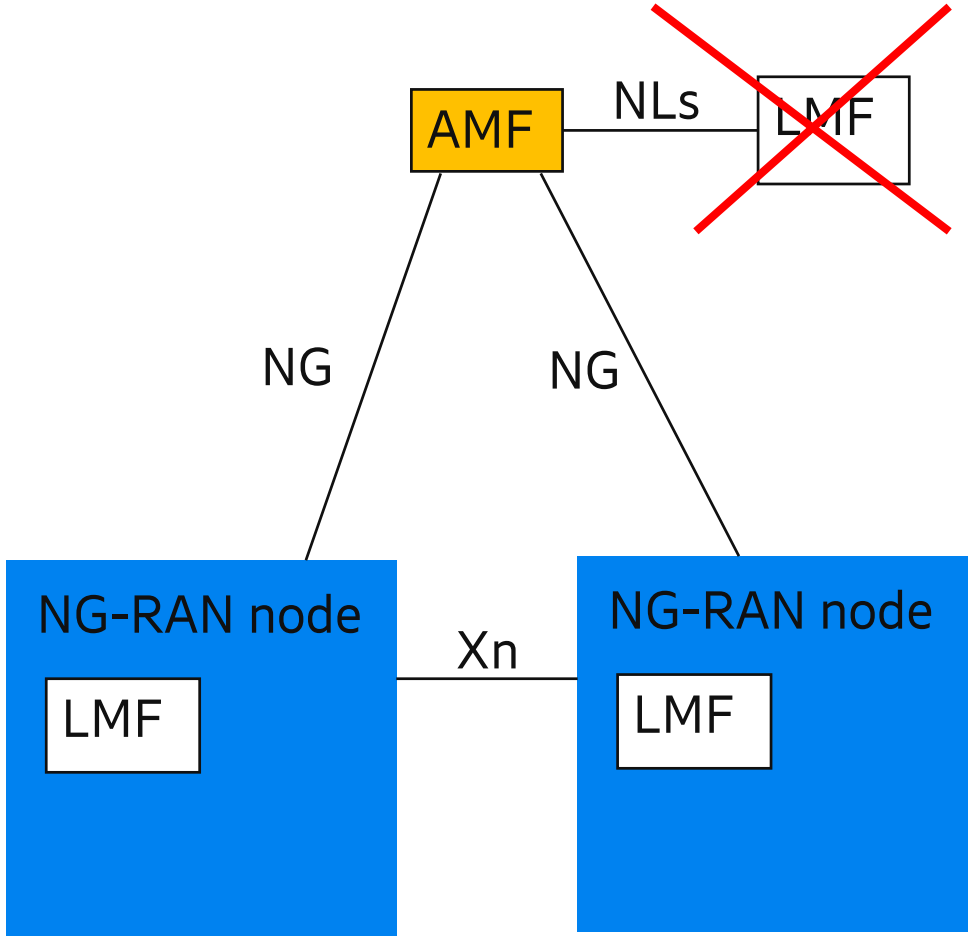

LMF in RAN: UE Mobility

- Unlike the "centralized" LMF, the local LMF has knowledge of positioning sessions only for UEs served by co-located NG-RAN node
  - Once a UE is handed over, its measurement context is lost; the session needs to be restarted at the target (assuming resources are available, etc.)
  - If mobility support is desired, a signaling solution (e.g. Xn impact) will be needed
- Inter-NG-RAN-node mobility support seems problematic
- Unclear benefit

(For further reading: R3-190836)

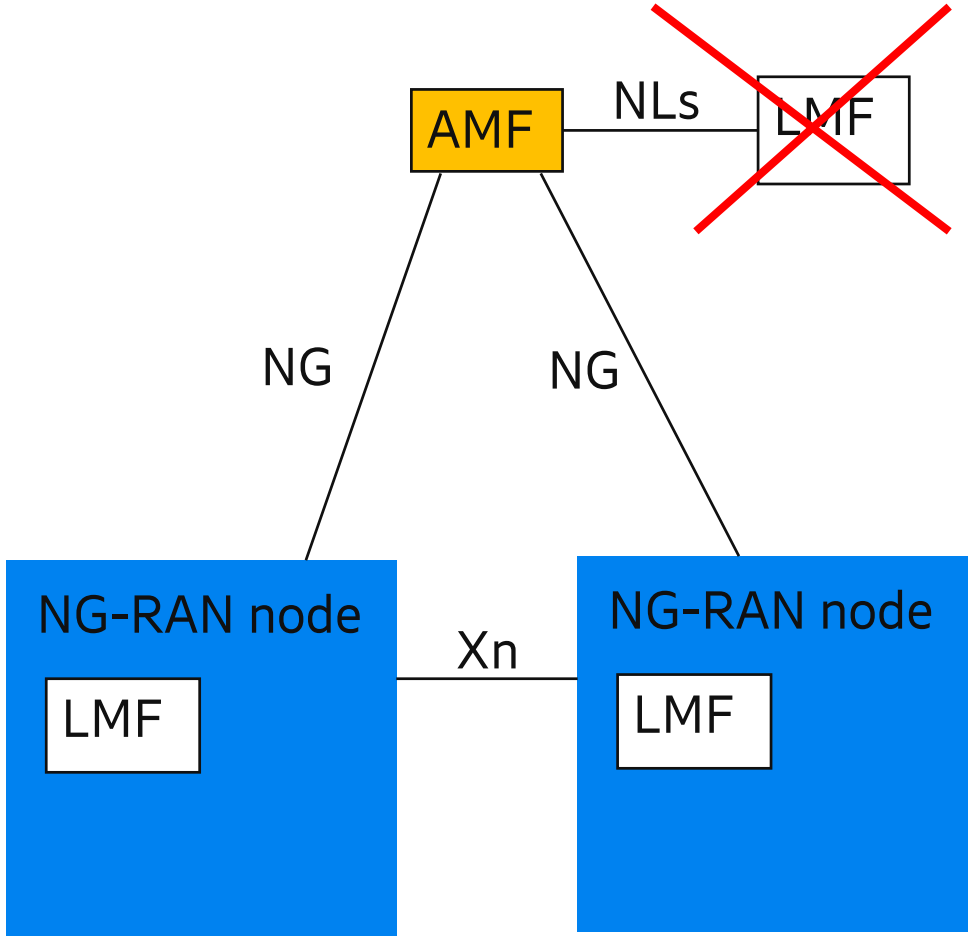

LCS Client in RAN

- LCS client is co-located in NG-RAN node
- Multiple LCS clients are allowed to trigger measurements toward the LMF
  - No need for coordination; LMF receives all requests and acts accordingly (may consolidate/aggregate requests etc.)
- For the split architecture, the LCS Client is likely to reside in the gNB-CU
- Seems beneficial: the RAN can directly request a positioning measurement for a UE
- Very limited impact on architecture and protocols
  - Support for client signaling through e.g. dedicated NG signaling (requires AMF impact, possibly less efficient) or new NRPPa procedures (no AMF impact, but seems to "abuse" NRPPa functionality)

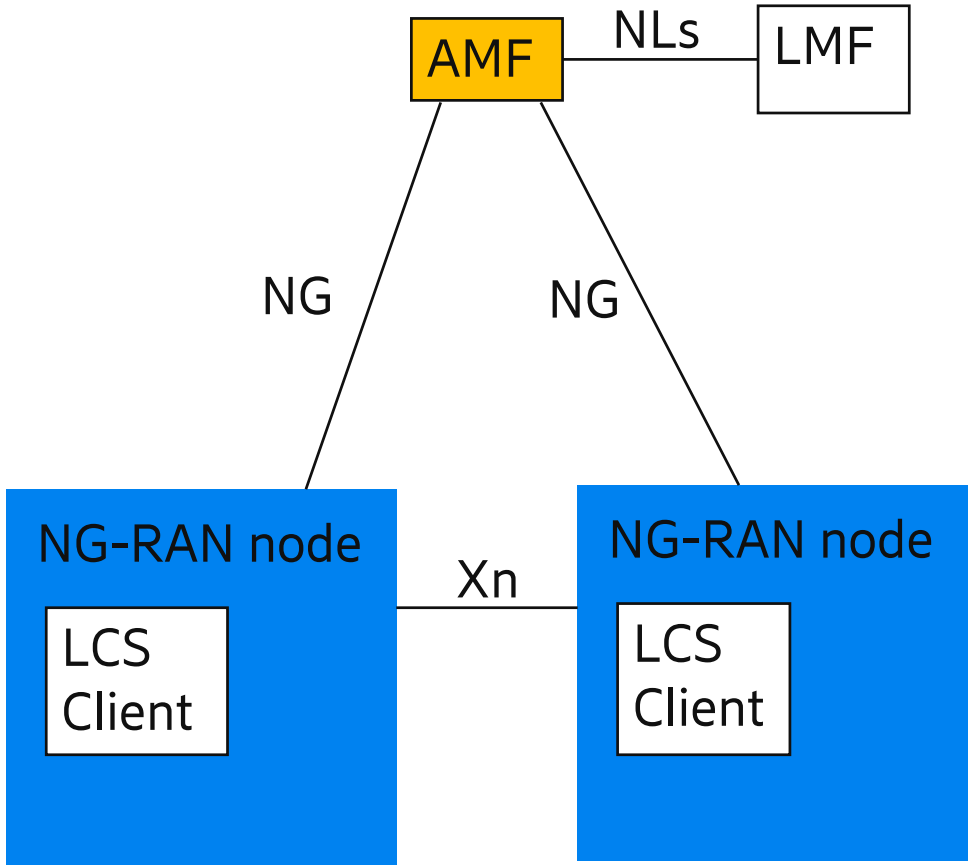

(For further reading: R3-190837)

The Measurement Node in NR – initial observations

- In principle, positioning measurement functions could be either
  - I) added to gNB-DU functions (with major impact to architecture, including e.g. gNB-CU functions, F1AP, NGAP impacts), or
  - II) Consolidated in a separate logical node
    - IIa) connected to the LMF?
    - IIb) connected to the gNB-CU?
- Possibly not the same thing as E-UTRAN LMU
  - Could host additional functions, e.g.
    - OTDOA PRS transmissions
    - Other types of positioning measurements?
    - …
- Further discussion needed in RAN3

(For further reading: R3-190747, R3-190748)

www.ericsson.com